The Big Cicero Creek Joint Drainage Board Stormwater Technical Standards Manual

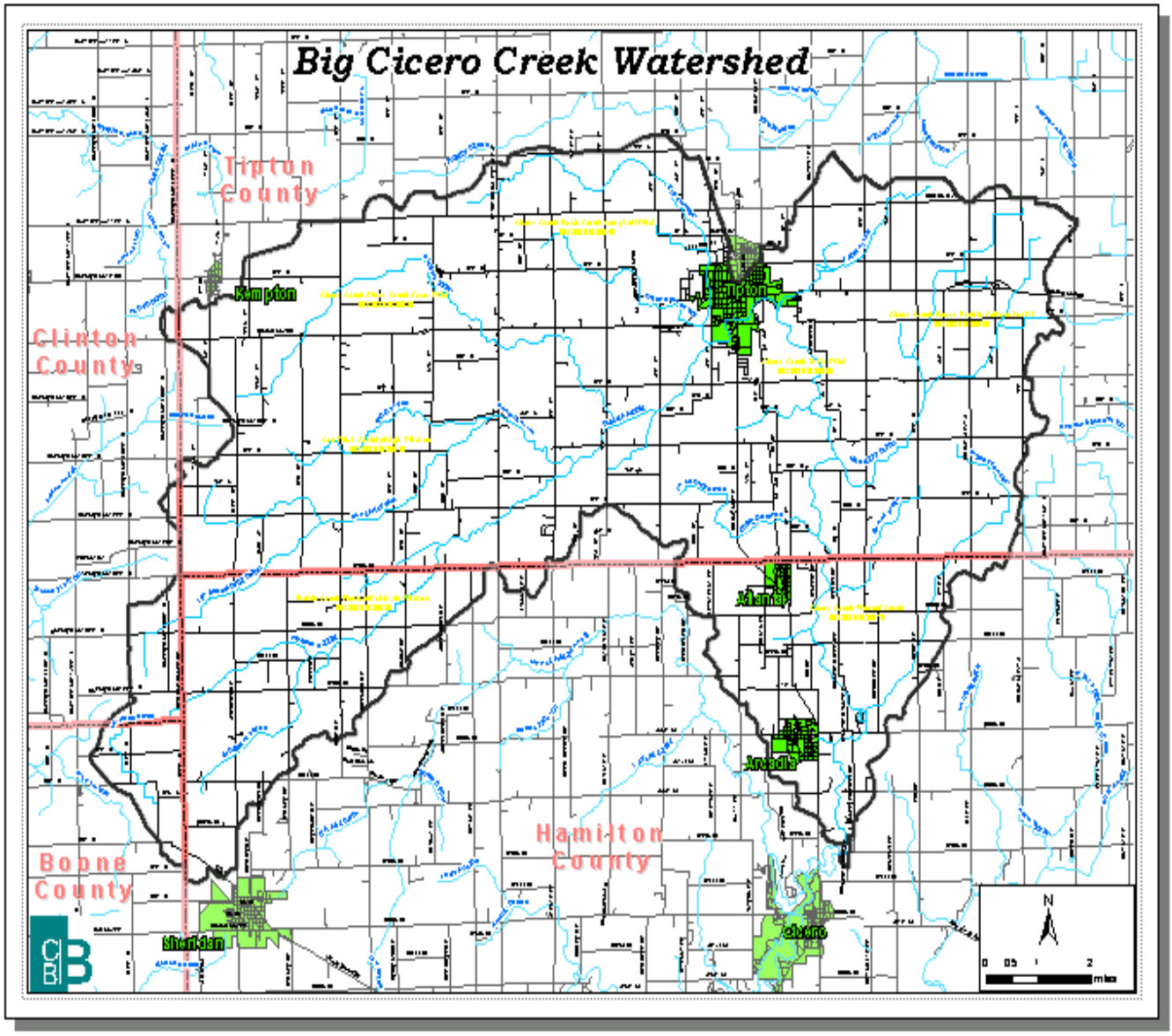

Developed By: Christopher B. Burke Engineering, LLC (CBBEL)
March 2015 Final Edition (approved by the Board on May 27, 2015)

TABLE OF CONTENTS

Chapter	Title
100	POLICY AND PROCEDURES
200	HYDROLOGY
300	HYDRAULICS AND HYDRAULIC STRUCTURES
400	STORM SEWER PIPES AND OPEN CULVERT MATERIAL
500	INSTALLATION OF STORMWATER FACILITIES
600	EROSION AND SEDIMENT CONTROL FOR CONSTRUCTION SITES
700	POST-CONSTRUCTION STORMWATER QUALITY MANAGEMENT

CHAPTER 100 POLICY AND PROCEDURES

SECTION 101 INTRODUCTION

101.01 Section Purpose

This manual provides technical standards for proper stormwater management and stormwater quality practices for those engineers, builders, contractors, land planners, and property owners contemplating some form of land alteration or improvement within the Big Cicero Creek Watershed. This Stormwater Technical Standards Manual is intended to establish the policies relating to stormwater management, stormwater quality practices, and flood control, submittal requirements and procedures for issuance of a stormwater permit, and procedures for inspection, testing and final acceptance of stormwater facilities.

The regulations have been established to accomplish the following objectives:

- Provide for consistent, high quality project design and evaluation by consolidating current departmental standards and "policies" within a single document.
- Establish minimum requirements and standards for stormwater management plan submittals and project reviews.
- Facilitate more consistent review of stormwater permit applications and land alteration plans by the stormwater permit staff of various jurisdictions in the watershed.
- Establish a standard for the proper and consistent installation of stormwater facilities, with a high level of workmanship, according to the approved stormwater management plan.
- Minimize the impacts of new development and redevelopment projects on existing stormwater management facilities.

This Manual was developed with the assumption that the user will possess a basic understanding of civil engineering design, construction, stormwater quality practices, or land alteration, depending upon the users' particular area of expertise. Readers of the Manual which are not qualified by education and experience in the field of construction, engineering, stormwater quality practices, or land alteration should consult with a more qualified person or persons possessing professional expertise in one or more of these fields prior to application of the requirements set forth herein.

101.02 Provisions

This Manual, together with all future revisions, shall be referred to as **"The Big Cicero Creek Joint Drainage Board Stormwater Technical Standards Manual".**

101.03 Applicability

The provisions of this Manual shall apply to all areas within the Big Cicero Creek Watershed, including unincorporated and incorporated areas that eventually drain to the Big Cicero Creek Regulated Drain. Figure 101-1 shows the limits of the watershed and local jurisdictions involved.

This Manual applies to all land altering projects as stated and defined in the applicable Stormwater Runoff Ordinances of each jurisdiction within the Big Cicero Creek Watershed. Any land alteration, within the jurisdiction of this Manual, must be accomplished in conformity with the stormwater requirements set forth herein. "Land Alteration" shall generally refer to any on-site or off-site action taken relative to land which either:

1. Changes the contour; or
2. Increases the runoff rate or volume; or
3. Changes the elevation; or

4. Decreases the rate at which water is absorbed; or

5. Changes the drainage pattern; or

6. Creates or changes a stormwater facility; or

7. Involves construction, enlargement, location or relocation of any building on a permanent foundation; or

8. Increases the delivery of point and/or non-point source pollution to streams; or

9. Relocates, encloses, or alters a stream or open channel stormwater conveyance; or

10. Creates an impoundment.

This Manual should be used in conjunction with the applicable stormwater management ordinances of each jurisdiction within the Big Cicero Creek Watershed. Additional requirements related to land alteration may be found in the existing codes and ordinances of each jurisdiction within the Big Cicero Creek Watershed. Exceptions to the provisions of this Manual are provided in the applicable stormwater management ordinances of each jurisdiction within the Big Cicero Creek Watershed.

When the project site that is located within the Big Cicero Creek Watershed falls within the corporate limits of a municipality or any County's unincorporated area, adherence to the requirements of both entities is required. In case there is a conflict between the requirements of the affected jurisdiction and those of the Big Cicero Creek Watershed, the most restrictive requirements shall apply.

101.04 Stormwater Manual Organization

This Manual is organized to present the technical and engineering procedures and criteria needed to comply with the land areas under the stormwater regulations of each jurisdiction within the Big Cicero Creek Watershed.

Each chapter of this Manual contains an initial section that presents all of the policies and procedures that must be satisfied for approval. These policies and procedures shall be considered as design criteria that are unique for approval within the jurisdiction of this Manual.

The site designer is encouraged to review the LID discussion in Chapter 700 prior to the site design to take advantage of runoff reduction recognitions provided towards water quantity calculations discussed in earlier chapters if LID practices are utilized as part of the site design.

101.05 Updating

The process of updating this Manual shall be through the Big Cicero Creek Joint Drainage Board. This Manual shall be periodically updated and revised, as necessary, to reflect current engineering practices and information applicable to land areas in the Big Cicero Creek Watershed, Users of this Manual are encouraged to obtain any and all updates and supplements to this Manual each time a land alteration project is considered. The ultimate responsibility for checking for and obtaining updated material shall be the responsibility of the user.

The most current standards shall be required for approval of a land alteration. The incorporation of outdated standards in the design, implementation, and construction of a land alteration shall be cause for the Big Cicero Creek Joint Drainage Board to reject the proposed land alteration.

SECTION 102 PERMIT REQUIREMENTS AND PROCEDURES

102.01 Introduction

The project site owner shall submit an application for a stormwater management permit to the Big Cicero Creek Joint Drainage Board. The application will include a Draft Notice of Intent letter (NOI) that would also act as permit application form, construction plan sheets, stormwater drainage technical report, a stormwater pollution prevention plan, and any other necessary support information. Specific information to be included in the application can be found in Section 102.03 below. One (1) copy of each required application material must be submitted to the Big Cicero Creek Joint Drainage Board. . Additionally, a digital copy of the construction plans is required in a format accepted by the Big Cicero Creek Joint Drainage Board.

After the Big Cicero Creek Joint Drainage Board receives the application, the applicant will be notified as to whether their application was complete or insufficient. The applicant will be asked for additional information if the application is insufficient. All plans, reports, calculations, and narratives shall be signed and sealed by a professional engineer or a licensed land surveyor, registered in the State of Indiana. The information provided will be reviewed in detail by the Big Cicero Creek Joint Drainage Board and/or its plan review consultant(s). Once all comments have been received and review completed, the Big Cicero Creek Joint Drainage Board will either approve the project or request modifications.

Once a permit has been issued, the project site owner must file a Notice of Intent a minimum of 48 hours prior to the commencement of construction activities. Notification shall be in the form of an updated NOI form. The submittal of the NOI must be provided to the Surveyor's Office of the County in which the project is located and the IDEM. The IDEM submittal must include a proof of publication, verification that the Surveyor's Office of the County in which the project is located approved the plan, and a $100 fee. For the Surveyor's Office of the County in which the project is located, copies of the final, approved construction plans, stormwater drainage technical report, stormwater pollution prevention plan for construction sites, and post-construction stormwater pollution prevention plan shall also accompany the above-noted written notification and proof of publication. The number of required copies varies from case to case and should be determined by contacting the Surveyor's Office of the County in which the project is located. A pre-construction meeting is required to be held with the participation of the Surveyor's Office of the County in which the project is located and other entities involved prior to any grading activity to ensure that appropriate perimeter control measures have been implemented on the site and the location of any existing tiles has been properly marked.

Once construction starts, the project owner shall monitor construction activities and inspect all stormwater pollution prevention measures in compliance with all applicable ordinances and the terms and conditions of the approved permit. Upon completion of construction activities, as-built plans must be submitted to the Surveyor's Office of the County in which the project is located. A Notice of Termination (NOT) shall be sent to the Surveyor's Office of the County in which the project is located once the construction site has been stabilized and all temporary erosion and sediment control measures have been removed. The Surveyor's Office of the County in which the project is located, or a representative, shall inspect the construction site to verify the requirements for a NOT have been met in accordance with the Rule 5 (327 IAC 15-5). Once the applicant receives a "verified" copy of the NOT, they must forward a copy to IDEM. Permits issued under this scenario will expire 5 years from the date of issuance. If construction is not completed within 5 years, the NOI must be resubmitted at least 90 days prior to expiration. A flow chart of the major steps in the stormwater plan review/permit process is provided as Exhibit 102-1.

The different elements of a permit submittal for a Stormwater Management Permit approval by the Big Cicero Creek Joint Drainage Board include a Draft Notice of Intent (NOI), construction plans, a stormwater drainage technical report, a stormwater pollution prevention plan for active construction sites, a post-construction stormwater pollution prevention plan, and any other necessary supporting information. In addition, an updated NOI along with proof of publication of a public notice will need to be submitted directly to IDEM, with a copy provided to the Surveyor's

Office of the County in which the project is located after the permit is approved. All plans, reports, calculations, and narratives shall be signed and sealed by a professional engineer or a licensed land surveyor, registered in the State of Indiana.

Specific projects or activities may be exempt from all or part of the informational requirements listed below. Exemptions are detailed in the applicable ordinances and "Applicability and Exemptions" Sections of Chapters 200 through 700. If a project or activity is exempt from any or all requirements of the ordinances or this Manual, an application should be filed listing the exemption criteria met, in lieu of the information requirements listed below. The level of detailed information requested below is not required from individual lots, disturbing less than 1 acre of land, developed within a larger permitted project site. Review and acceptance of such lots is covered under Section 102.07 of this Chapter.

In order to gain an understanding of the stormwater management requirements for a specific project, a developer or his/her engineer may submit conceptual drainage plans and calculations to the Big Cicero Creek Joint Drainage Board and request an informal meeting to discuss the proposed project. The direction provided by the Surveyor's Office of the County in which the project is located as a result of such a review is based on preliminary data and shall not be construed as an approval or binding on either party.

102.02
Draft Notice of Intent

The NOI is a standard form developed by the Indiana Department of Environmental Management which requires general project information. As part of Stormwater Management Permit application package, the NOI form should be completed in full based on data and information available at the time of application.

An updated version of this form, accompanied by proof of publication in a newspaper of general circulation in the affected area that notified the public that a construction activity is to commence, will need to be resubmitted later after the stormwater management permit is granted and at least 48 hours prior to commencement of construction. The publication must include the following language:

> "(Company name, address) is submitting an NOI letter to notify **(Big Cicero Creek Watershed jurisdiction), Indiana** and the Indiana Department of Environmental Management of our intent to comply with the requirements of **the applicable (Big Cicero Creek Watershed jurisdiction) stormwater management ordinances**, as well as the requirements of 327 IAC 15-5 and 327 IAC 15-13, to discharge stormwater from construction activities for the following project: (name of the construction project, address of the location of the construction project, and Parcel Identification Number). Run-off from the project site will discharge to (stream(s) receiving the discharge(s))."

102.03
Construction Plans

Construction plan sheets (larger than 11" by 17", but not to exceed 24" by 36" in size) with a scale of 1 inch = 20 feet, 30 feet, 40 feet, 50 feet or 60 feet, and an accompanying narrative report shall describe and depict the existing and proposed conditions. Note that in order to gain an understanding of and to evaluate the relationship between the proposed improvements for a specific project section/phase and the proposed improvements for an overall multi-section (phased) project, the detailed information requested herein for the first section/phase being permitted must be accompanied by an overall project plan that includes the location, dimensions, and supporting analyses of all detention/retention facilities, primary conveyance facilities, and outlet conditions. Construction plans need to include the following detailed items:

i. Title sheet which includes location map, vicinity map, operating authority, design company name, developer name, and index of plan sheets.

ii. A copy of a legal boundary survey for the site, performed in accordance with Rule 12 of Title 865 of the Indiana Administrative Code or any applicable and subsequently adopted rule or regulation for the subdivision limits, including all drainage easements and wetlands.

iii. A reduced plat or project site map showing the parcel identification numbers, lot numbers, lot boundaries, easements, and road layout and names. The reduced map must be legible and submitted on a sheet or sheets no larger than eleven (11) inches by seventeen (17) inches for all phases or sections of the project site.

iv. An existing project site layout that must include the following information:

a. A topographic map of the land to be developed superimposed on a County GIS ortho-aerial map, when available, at a scale of 1”=100”. The exhibit should provide the contour information and include all roads and buildings within a minimum 500’ radius beyond the project boundaries.. The contour intervals for the land to be developed shall be one (1) foot when slopes are less than or equal to two percent (<2%) and shall be two (2) feet when slopes exceed two percent (>2%). All elevations shall be given in North American Vertical Datum of 1988 (NAVD). The horizontal datum of topographic map shall be based on Indiana State Plane Coordinates, NAD83. The map will contain a notation indicating the noted datum information. The names of adjoining property owners must be labeled on the map.
b. Location, name, and normal water level of all wetlands, lakes, ponds, and water courses on or adjacent to the project site.
c. Location of all existing structures on the project site.
d. One hundred (100) year floodplains, floodway fringes, and floodways. Please note if none exists.
e. Identification and delineation of vegetative cover such as grass, weeds, brush, and trees on the project site.
f. Location of storm, sanitary, combined sewer, and septic tank systems and outfalls.
g. Land use of all adjacent properties.
h. Identification and delineation of sensitive areas.
i. The location of regulated drains, farm drains, inlets and outfalls. Prior to construction plan design beginning, all existing regulated drains on the site are to be located, exposed, and invert shots taken to ensure the system is installed deep enough to provide drainage to the upstream watershed. This is also applicable if the site outlets into a regulated drain and no as-built drawings on the drain exist.
j. Location of all existing cornerstones within the proposed development and a plan to protect and preserve them.
k. Location of all known wells.
l. Location of known potential contaminant facilities.

v. A grading and drainage plan, including the following information:

a. All information from the existing site layout items listed above.
b. Location of all proposed site improvements, including roads, utilities, lot delineation and identification, proposed structures, and common areas.
c. One hundred (100) year floodplains, floodway fringes, and floodways. Please note if none exists.

d. Delineation of all proposed land disturbing activities, including off-site activities that will provide services to the project site.
e. Information regarding any off-site borrow, stockpile, or disposal areas that are associated with a project site, and under the control of the project site owner.
f. Proposed topographic information at one-foot contour interval.
g. Location, size, and dimensions of all existing streams to be maintained, and new drainage systems such as culverts, bridges, storm sewers, conveyance channels, and 100-year overflow paths/ponding areas shown as hatched areas, along with all associated easements.
h. Pipes and associated structures data, including sizes, lengths, and material
i. Location, size, and dimensions of features such as permanent retention or detention facilities, including natural or constructed wetlands, used for the purpose of stormwater management. Include existing retention or detention facilities that will be maintained, enlarged, or otherwise altered and new ponds or basins to be built.
j. Emergency flood routing path(s) and their invert elevations from detention facilities to the receiving system.
k. One or more typical cross sections of all existing and proposed channels or other open drainage facilities carried to a point above the 100-year high water and showing the elevation of the existing land and the proposed changes, together with the high water elevations expected from the 100-year storm under the controlled conditions called for by the applicable stormwater management ordinance(s) of the appropriate Big Cicero Creek Watershed jurisdiction, and the relationship of structures, streets, and other facilities.
l. A drainage summary, which summarizes the basic conditions of the drainage design, including site acreage, off-site/upstream acreage, allowable release rates, post-developed 10-year, and 100-year flows leaving the site, volume of detention required, volume of detention provided, and any release rate restrictions.
m. Arrows designating the direction of stormwater runoff.
n. Spot elevations appropriate to define elevations.

vi. Utility plan sheet(s) showing the location of all existing and proposed utility lines for the project, including all available information related to the utilities, such as pipe size and material, and invert elevations.

vii. Storm sewer plan/profile sheet(s) at a scale of 5 vertical and 50 horizontal showing the elevation, size, length, location of all proposed storm sewers. Existing and proposed ground grades, storm sewer structures elevations, and all existing and proposed utility crossings also must be included. The actual correct datum (not an assumed one) must be used for the profile sheets and all pipe inverts, top of casting elevations, casting types, structure numbers, and pipe slopes clearly labeled.

viii. A plat on the same sheet size used for recording, including the following information:

a. Legal description.
b. Cross reference to Rule 12.
c. Regulated drain statement and table.

ix. Proposed subdivision landscape plans

x. A copy of the subdivision covenants

xi. Any other information required by the Big Cicero Creek Joint Drainage Board in order to thoroughly evaluate the submitted material.

102.04
Stormwater Drainage Technical Report

A written stormwater drainage technical report must contain a discussion of the steps taken in the design of the stormwater drainage system. Note that in order to gain an understanding of and to evaluate the relationship between the proposed improvements for a specific project section/phase and the proposed improvements for an overall multi-section (phased) project, the detailed information requested herein for the first section/phase being permitted must be accompanied by an overall project plan that includes the location, dimensions, and supporting analyses of all detention/retention facilities, primary conveyance facilities, and outlet conditions. The technical report needs to include the following detailed items:

i. A summary report, including the following information:

a. Description of the nature and purpose of the project.
b. The significant drainage problems associated with the project.
c. The analysis procedure used to evaluate these problems and to propose solutions.
d. Any assumptions or special conditions associated with the use of these procedures, especially the hydrologic or hydraulic methods.
e. The proposed design of the drainage control system.
f. The results of the analysis of the proposed drainage control system showing that it does solve the project's drainage problems and that it meets the requirements of the ordinance and these standards. This must include a table summarizing, for each eventual site outlet, the pre-developed acreage tributary to each eventual site outlet, the unit discharge allowable release rate used, the resulting allowable release rate in cfs for the post-developed 10-year and 100-year events, pre-developed 2-year flow rates in cfs as well as pre- and post-developed flow rates for 10- and 100-year events. The worksheet provided as Table 102-1 should be filled and submitted as part of the report. Any hydrologic or hydraulic calculations or modeling results must be adequately cited and described in the summary description. If hydrologic or hydraulic models are used, the input and output files for all necessary runs must be included in the appendices. A map showing any drainage area subdivisions used in the analysis must accompany the report.
g. Soil properties, characteristics, limitations, and hazards associated with the project site and the measures that will be integrated into the project to overcome or minimize adverse soil conditions.
h. A narrative and photographic record of the condition of the downstream receiving system.
i. Identification of any other State or Federal water quality permits that are required for construction activities associated with the owner's project site.
j. Proof of Errors and Omissions Insurance for the registered professional engineer or licensed surveyor showing a minimum amount of $1,000,000 in coverage.

ii. A Hydrologic/Hydraulic Analysis, consistent with the methodologies and calculation included in Chapters 200 and 300 of this Manual, and including the following information:

a. A hydraulic report detailing existing and proposed drainage patterns on the subject site. The report should include a description of present land use and proposed land use. Any off-site drainage entering the site or any downstream restrictions should be addressed as well. This report should be

comprehensive and detail all of the steps the engineer took during the design process.

b. All hydrologic and hydraulic computations should be included in the submittal. These calculations should include, but are not limited to the following: runoff curve numbers and runoff coefficients, runoff calculations, stage-discharge relationships, times-of-concentration and storage volumes.
c. Copies of all computer runs. These computer runs should include both the input and the outputs. Electronic copies of the computer runs with input files must also be included.
d. A set of exhibits should be included showing the drainage sub-areas and a schematic detailing of how the computer models were set up.
e. A conclusion which summarizes the hydraulic design and details how this design satisfies the applicable stormwater management ordinance(s) of the appropriate Big Cicero Creek Watershed jurisdiction and these Standards.

102.05
Stormwater Pollution Prevention Plan for Construction Sites

A stormwater pollution prevention plan associated with construction activities must be designed to, at least, meet the requirements of the applicable stormwater management ordinance(s) of the appropriate Big Cicero Creek Watershed jurisdiction and must include the following:

i. Location, dimensions, detailed specifications, and construction details of all temporary and permanent stormwater quality measures.
ii. Soil map of the predominant soil types, as determined by the United States Department of Agriculture (USDA), Natural Resources Conservation Service (NRCS) Soil Survey, or as determined by a soil scientist. Hydrologic classification for soils should be shown when hydrologic methods requiring soils information are used. A soil legend must be included with the soil map.
iii. 14-Digit Watershed Hydrologic Unit Code.
iv. An estimate of the peak discharge, based on the ten (10) year storm 24-hour event, of the project site for post-construction conditions.
v. Locations where stormwater may be directly discharged into groundwater, such as abandoned wells or sinkholes. Please note if none exists.
vi. Locations of specific points where stormwater discharge will leave the project site.
vii. Name of all receiving waters. If the discharge is to a separate MS4, identify the name of the municipal owner and the ultimate receiving water.
viii. Temporary stabilization plans and sequence of implementation.
ix. Permanent stabilization plans and sequence of implementation.
x. Temporary and permanent stabilization plans shall include the following:

    a. Specifications and application rates for soil amendments and seed mixtures.
    b. The type and application rate for anchored mulch.

xi. General construction sequence of how the project site will be built, including phases of construction.
xii. Construction sequence describing the relationship between implementation of stormwater quality measures and stages of construction activities.
xiii. Location of all soil stockpiles and borrow areas.
xiv. A typical erosion and sediment control plan for individual lot development.
xv. Self-monitoring program including plan and procedures.
xvi. A description of potential pollutant sources associated with the construction activities, which may reasonably be expected to add a significant amount of pollutants to stormwater discharges.
xvii. Material handling and storage associated with construction activity shall meet the spill prevention and spill response requirements in 327 IAC 2-6.1.

xviii. Name, address, telephone number, and list of qualifications of the trained individual in charge of the mandatory stormwater pollution prevention self-monitoring program for the project site.

102.06
Post-Construction Stormwater Pollution Prevention Plan

The post-construction stormwater pollution prevention plan must include the following information:

i. A description of potential pollutant sources from the proposed land use, which may reasonably be expected to add a significant amount of pollutants to stormwater discharges.
ii. Location, dimensions, detailed specifications, and construction details of all post-construction stormwater quality measures.
iii. A description of measures that will be installed to control pollutants in stormwater discharges that will occur after construction activities have been completed.
iv. A sequence describing when each post-construction stormwater quality measure will be installed.
v. Stormwater quality measures that will remove or minimize pollutants from stormwater run-off.
vi. Stormwater quality measures that will be implemented to prevent or minimize adverse impacts to stream and riparian habitat.
vii. An operation and maintenance manual for all post-construction stormwater quality measures to facilitate their proper long term function. This operation and maintenance manual shall be in a separate cover and shall be made available to future parties who will assume responsibility for the operation and maintenance of the post-construction stormwater quality measures. The manual shall include the following:

    a. Contact information for the BMP owner (i.e. name, address, business phone number, cell phone number, pager number, e-mail address, etc.).
    b. A statement that the BMP owner is responsible for all costs associated with maintaining the BMP.
    c. A right-of-entry statement allowing personnel of the Surveyor's Office of the County in which the project is located to inspect and maintain the BMP.
    d. Specific actions to be taken regarding routine maintenance, remedial maintenance of structural components, and sediment removal. Sediment removal procedures should be explained in both narrative and graphical forms. A tabular schedule should be provided listing all maintenance activities and dates for performing these required maintenance activities.
    e. Site drawings showing the location of the BMP and access easement, cross sections of BMP features (i.e. pond, forebay(s), structural components, etc.), and the point of discharge for stormwater treated by the BMP.

viii. Any other information necessary for the review the project if LID Approach is being utilized as discussed in Chapter 700 of these Standards Manual.

102.07
Review of Individual Lots Within a Permitted Project

For individual lots disturbing less than 1 acre, developed within a larger permitted project that has been issued a "verified" NOT by the Surveyor's Office of the County in which the project is located, a formal review and issuance of an Individual Lot Plot Plan Permit will be required before a building permit can be issued. All stormwater management measures necessary to comply with the applicable stormwater management ordinance(s) of the appropriate Big Cicero Creek Watershed jurisdiction must be implemented in accordance with permitted plans for the larger project. The Individual Lot Plot Plan Permit is not required prior to the Issuance of a "verified" NOT to the larger project as the responsibility for proper erosion control for individual lots within

the project would still rest with the developer until a "verified" NOT is issued for the larger project.

The following information must be submitted to the Big Cicero Creek Joint Drainage Board, for review and acceptance, by the individual lot operator, whether owning the property or acting as the agent of the property owner, as part of a request for review and issuance of an Individual Lot Plot Plan Permit that must be obtained prior to the issuance of a building permit.

A. The individual lot operator must complete a Residential Lot Plot Plan Permit Request and pay the applicable fee.
B. A certified site layout for the subject lot and all adjacent lots showing building pad location, dimensions, and elevations, and the drainage patterns and swales.
C. Erosion and sediment control plan that, at a minimum, includes the following measures:
   i. Installation and maintenance of a stable construction site access.
   ii. Installation and maintenance of appropriate perimeter erosion and sediment control measures prior to land disturbance.
   iii. Minimization of sediment discharge and tracking from the lot.
   iv. Clean-up of sediment that is either tracked or washed onto roads. Bulk clearing of sediment shall not include flushing the area with water. Cleared sediment must be redistributed or disposed of in a manner that is in compliance with all applicable statutes and rules.
   v. Adjacent lots disturbed by an individual lot operator must be repaired and stabilized with temporary or permanent surface stabilization.
   vi. Self-monitoring program including plan and procedures.
D. Name, address, telephone number, and list of qualifications of the trained individual in charge of the mandatory stormwater pollution prevention self-monitoring program for the project site.

The individual lot owner is responsible for installation and maintenance of all erosion and sediment control measures until the site is stabilized.

102.08
Changes to Plans

Any changes or deviations in the detailed plans and specifications after approval of the applicable stormwater management permit shall be filed with, and accepted by, the Big Cicero Creek Joint Drainage Board prior to the land development involving the change. Copies of the changes, if accepted, shall be attached to the original plans and specifications.

102.09
Fee Structure

A. Fee Amount

As a condition of the submittal and the review of development plans by the Big Cicero Creek Joint Drainage Board , the applicant shall agree to pay the Big Cicero Creek Joint Drainage Board the applicable fee, as specified by the Big Cicero Creek Joint Drainage Board, with respect to the review of all drainage submittals, preliminary plans, final plans, construction plans and accompanying information and data, as well as any applicable pre-paid inspection fees.

B. Time of Payment

Before approval of plans, the Big Cicero Creek Joint Drainage Board will furnish a written statement to the applicant specifying the total amount due the Big Cicero Creek Joint Drainage Board in connection with the review of the applicant's submittals, plans and accompanying information and data, including the amount required to be paid by applicant for review and pre-paid inspection fees.

As a condition of acceptance of final drainage plans by the Big Cicero Creek Joint Drainage Board, the applicant shall pay to the Big Cicero Creek Joint Drainage Board the

sum set forth in said statement. The Big Cicero Creek Joint Drainage Board may issue such a billing statement before the project advances to the final acceptance stage, and such payment is due by applicant upon receipt of said billing statement regardless of whether the project is advanced to the final acceptance stage.

The Big Cicero Creek Joint Drainage Board shall have the right to not accept the drainage improvements or to not accept the advancement of any project for which the applicable fees have not been paid.

C. Method of Payment

Fees shall be paid by one of the following methods:

- Certified Check
- Cashier's Check
- Money Order
- Such other methods as may be agreed in writing by the Big Cicero Creek Joint Drainage Board.

All checks shall be made payable to and delivered to the Big Cicero Creek Joint Drainage Board for recording.

D. Waiver of Payment

Fees may be waived for certain projects at the discretion of the Big Cicero Creek Joint Drainage Board.

102.10
Performance Surety

As a condition of approval and issuance of the permit, the Big Cicero Creek Joint Drainage Board shall require the applicant to provide assurance in the form of an irrevocable letter of credit or a bond when the stormwater management plan has been accepted, all applicable fees are paid, and before construction begins. Said assurance will guarantee a good faith execution of the stormwater drainage plan, the stormwater pollution prevention plan, the stormwater quality management plan, and any permit conditions. Specifically, the said assurance is intended to guarantee that the following be installed, and continuously monitored and maintained during the construction under the provisions of the applicable stormwater management ordinance(s) of the appropriate Big Cicero Creek Watershed jurisdiction and this Technical Standards:

- Erosion and sediment controls
- Storm sewer system
- Sub-Surface Drains (SSD)
- Detention facilities
- BMPs

Bonds are to run to the Big Cicero Creek Joint Drainage Board. Said financial performance guarantee shall be conditioned upon the following:

1. The completion of stormwater management improvements and installations shall be within two years from the recording of the final plat;
2. A sum shall be fixed and approved by the Big Cicero Creek Joint Drainage Board equal to one hundred twenty percent (120%) of the total estimated cost of all stormwater management improvements and installations provided in the construction drawings and accompanying data to specifications cited herein based on the contractor's bid or an estimate prepared by a professional engineer registered in the state of Indiana. Said costs shall be for the installation and ongoing monitoring and maintenance during construction of erosion control measures and the construction and ongoing monitoring and maintenance during construction of storm drainage infrastructure, detention/retention facilities, and stormwater quality BMPs, as regulated under the applicable stormwater management ordinance(s) of the appropriate Big Cicero Creek Watershed jurisdiction and this Technical Standards. Assurances shall be for a minimum of $5,000.

3. Each public facility improvement or installation provided in the final plat or accompanying data shall be bonded individually and shall not have the performance guarantee provided in combination with any of the other public facility improvements and installations. Separate bonds may be issued for various items within the same public facility improvement or installation so that they can be released as work for each item is completed and accepted.
4. The performance bond shall be issued in the name of the owner or the developer.

The above performance surety requirements may be waived by the Big Cicero Creek Joint Drainage Board if a similar or larger amount of surety is to be filed and in effect with the political jurisdiction the project is located in.

102.11
Permit Terms and Conditions

In granting a stormwater management permit, the Big Cicero Creek Joint Drainage Board may impose such terms and conditions as are reasonably necessary to meet the purposes of this Ordinance. The project site owner shall insure compliance with such terms and conditions. Non-compliance with the terms and conditions of permits will be subject to enforcement as described in the applicable ordinances.

The project site owner shall inform all general contractors, construction management firms, grading or excavating contractors, utility contractors, and the contractors that have primary oversight on individual building lots of the terms and conditions of the stormwater management permit and the schedule for proposed implementation.

It is the intent of the Big Cicero Creek Joint Drainage Board to direct the community's physical growth away from sensitive areas and towards areas that can support it without compromising water quality. In the event that a project site is determined to impact or discharge to a Sensitive Area or is located in an Impact Drainage Area, the Big Cicero Creek Joint Drainage Board may require more stringent stormwater quantity and quality measures than detailed in the applicable ordinances or in the latest edition of the Indiana Stormwater Quality Manual.

A. Determination of Sensitive Areas
Sensitive Areas include highly erodible soils, wetlands, threatened or endangered species habitat, outstanding waters, impaired waters, recreational waters, and surface drinking water sources. A listing of highly erodible soils, outstanding water, impaired water, recreation water, and surface drinking water sources can be found in HCSO Storm Water Quality Management Plan (SWQMP) - Part B and its updates. Any discharge from a stormwater practice that is a Class V injection well shall meet the Indiana groundwater quality standards. If wetlands are suspected on a site, wetland delineation shall be completed in accordance with the methodology established by the U.S. Army Corps of Engineers (COE) and the wetland addressed in accordance to the requirements of the law. If the presence of threatened or endangered species habitat is suspected on a site, the site must be evaluated and inspected by a professional experienced in such and the results reported to the Big Cicero Creek Joint Drainage Board. Special terms and conditions for development determined to impact or discharge to any Sensitive Area shall be included in the stormwater management permit.

B. Determination of Impact Drainage Areas
The following areas shall be designated as Impact Drainage Areas, unless good reason for not including them is presented to the Big Cicero Creek Joint Drainage Board.

i. A floodway or floodplain as designated by the most updated Code dealing with floodplain regulation in the County in which the project is located.

ii. Land within 75 feet of each bank of any ditch within the Regulated Stormwater Drainage System of the County in which the project is located.

iii. Land within 75 feet of the centerline of any drain tile or enclosed conduit within the Regulated Drainage System of the County in which the project is located.

The Big Cicero Creek Joint Drainage Board is authorized, but is not required, to classify certain additional geographical areas as Impact Drainage Areas. In determining Impact Drainage Areas, the Big Cicero Creek Joint Drainage Board shall consider such factors as land use, topography, soil type, capacity of existing drains, and distance from adequate drainage facility.

Land that does not have an adequate outlet, taking into consideration the capacity and depth of the outlet, may be designated as an Impact Drainage Area by the Big Cicero Creek Joint Drainage Board. Special terms and conditions for development within any Impact Drainage Area shall be included in the stormwater management permit.

SECTION 103 CONSTRUCTION INSPECTION AND APPROVAL

103.01 Introduction

After the approval of the stormwater management permit, The Big Cicero Creek Joint Drainage Board or the Surveyor's Office of the County in which the project is located has the authority to conduct inspections of the work being done to ensure full compliance with the provisions of the applicable ordinances and this Manual, and the terms and conditions of the approved permit. The installed storm sewer shall not be accepted until all requirements for inspection and testing described in this Manual are completed. Inspection of the stormwater drainage system and associated land grading and erosion control measures shall be completed by the Big Cicero Creek Joint Drainage Board and/or the Surveyor's Office of the County in which the project is located as set forth herein to ensure conformance with the approved site construction plan and supporting documents. Any portion of the stormwater facility not passing the tests prescribed herein shall be repaired or replaced to the extent required by the Big Cicero Creek Joint Drainage Board and/or the Surveyor's Office of the County in which the project is located, and retested.

103.02 General requirements

The Contractor and/or Owner shall provide written notice to the Surveyor's Office of the County in which the project is located of planned commencement of construction forty-eight (48) hours prior to such commencement. Copies of the final, approved construction plans, stormwater drainage technical report, stormwater pollution prevention plan for construction sites, and post-construction stormwater pollution prevention plan shall also accompany the above-noted written notification. The number of required copies varies from case to case and should be determined by contacting the Surveyor's Office of the County in which the project is located.

A pre-construction meeting is required to be held with the participation of the Surveyor's Office of the County in which the project is located and other entities involved prior to any grading activity to ensure that appropriate erosion control measures have been implemented on the site and the location of any existing tiles has been properly marked.

A stop-work-order shall be issued by the Surveyor's Office of the County in which the project is located for all projects that are proceeding without such notification. The Big Cicero Creek Joint Drainage Board and/or the Surveyor's Office of the County in which the project is located has the authority to conduct inspections of the work being done to ensure full compliance with the provisions of the applicable ordinances and this Manual, and the terms and conditions of the approved permit.

103.03
Testing

Once constructed, all storm sewer pipes and manholes shall be soil tight. The Contractor shall repair to the satisfaction of the Surveyor's Office of the County in which the project is located all visible points of possible bedding and/or backfill infiltration into the system. The method of repair shall be per the approval of the Surveyor's Office of the County in which the project is located. When necessary, the Contractor shall remove and reconstruct as much of the work as is necessary to obtain a system that passes the minimum tests prescribed herein.

A. Mandrel Test for Plastic Pipes

No sooner than thirty (30) days after installation, all gravity flow storm sewers constructed of flexible pipe (PVC and HDPE) 33-inch in diameter or smaller shall be mandrel tested. A representative of the Surveyor's Office of the County in which the project is located shall be present on-site during all mandrel tests. The Surveyor's Office of the County in which the project is located shall be given written notification of the proposed testing times and locations at least 48 hours prior to the intended time for beginning of the tests. Arrangements for the cost and supply of all equipment necessary to perform mandrel tests shall be the responsibility of the Contractor and Owner.

Mandrel tests shall be conducted under the supervision of the Surveyor's Office of the County in which the project is located or their designated Observer.

A seven and one-half (7-1/2) percent "GO/NO-GO" Mandrel Deflection Test shall be performed on all PVC and HDPE gravity storm sewer pipe.

These pipes shall be mandrel led with a rigid device sized to pass seven and one-half (7-1/2) percent or less deflection (OR deformation) of the base inside diameter of the pipe. The mandrel test shall be conducted no earlier than thirty (30) days after reaching final trench backfill grade.

The mandrel (GO/NO-GO) device shall be cylindrical in shape and constructed with nine (9) or ten (10) evenly spaced arms or prongs. Variations of mandrel diameter dimensions due to pipe wall thickness tolerances or ovality (from heat, shipping, poor production, etc.) shall not be deducted from the diameter dimension of the mandrel but shall be counted as par of the 7-1/2% or lesser deflection allowance. Each pipe material/type required to be Mandrel tested shall be tested with a mandrel approved by the Surveyor's Office of the County in which the project is located and meeting the requirements of this chapter. The mandrel diameter dimension shall carry a minimum tolerance of 0.01 inches.

The mandrel shall be hand pulled through all sewer lines and any section of sewer not passing the mandrel shall be uncovered, replaced or repaired, and retested.

The contact length (L) shall be measured between points of contact on the mandrel arm.

The Contractor shall provide proving rings to check the mandrel. Drawings of mandrels with complete dimensions shall be furnished by the Contractor to the Surveyor's Office of the County in which the project is located upon request for each diameter and specification of pipe.

PVC or HDPE pipes that are 36-inch in diameter or larger shall be inspected through visual recordings (via closed circuit television) as well as a walk through (visual survey) inspection with the contractor, developer, and a representative from the Surveyor's Office of the County in which the project is located.

B. CMP and RCP Inspections

All reinforced concrete and corrugated metal storm sewer pipes that are 36-inch in diameter or larger shall be inspected through a walk through (visual survey) inspection with the contractor, developer, and a representative from the Surveyor's Office of the County in which the project is located.

All reinforced concrete and corrugated metal storm sewer pipes 33-inch in diameter or smaller are required to be inspected through closed circuit television viewing (CCTV) at the developer's or contractor's expense by a representative of the Surveyor's Office of the County in which the project is located as described herein. In those instances where CCTV is a required part of the stormwater permits approval, this televised viewing shall be completed in conformance with these minimum guidelines. The inspection between manholes shall be conducted as follows:

1. A camera equipped with remote control devices to adjust the light intensity and one thousand (1,000) lineal feet of cable shall be provided. The camera shall be able to transmit a continuous image to the television monitor as it is being pulled though the pipe. The image shall be clear enough to enable the Surveyor's Office of the County in which the project is located to easily evaluate the interior condition of the pipe. The camera should have a digital display for lineal footage and project number and an audio voice-over shall be made during the inspection identifying any problems.

2. The pipe shall be thoroughly cleaned before the camera is installed and televising is commenced. Cleaning of the pipe shall be the responsibility of the owner.

3. The CD – Digital format, as directed by the Surveyor's Office of the County in which the project is located, of the entire storm sewer line and reproduction map indicating the pipe segment numbers of all the pipe that has been televised shall be submitted to the department for review and placement in their permanent file. The pipe should be flooded with clear water just prior to video recording to show any bellies or sags in the pipe.

These inspections shall be required in order to identify, as examples, excessive sedimentation, joint failures, excessive deflections (CMP), damaged coatings or pavings (CMP), structural defects misalignments, sags, or other system defects which have the potential of affecting the hydraulic performance, durability, or structural integrity of the line segment. Reference should be made to Chapter 400 of this manual for guidance on criteria sufficient to warrant rejection of the installed storm sewer system.

Excessive deflection of CMPs shall be considered to exist under the following conditions: variations from a straight centerline; elliptical shape in a pipe intended to be round; dents or bends in the metal. Metallic or bituminous coatings that have been scratched, scraped, bruised, or otherwise broken shall be considered acceptable criteria for rejection of the installed system.

Any pipe and/or joint found to be defective as a result of the televised viewing shall be required to be repaired or replaced to the satisfaction and approval of the Surveyor's Office of the County in which the project is located. A re-televising of that portion of the storm sewer line identified as needing repair or replacement shall be required.

C. Manhole and Box Inlet Inspection

Each manhole and/or box inlet structure within all storm sewer line segments shall be visually inspected by a representative of the Surveyor's Office of the County in which the project is located prior to backfill to ensure seams are sealed, pipes have concrete collars, and structure is watertight. A secondary inspection by a representative of the Surveyor's Office of the County in which the project is located shall be required to check for excessive leakage, backfill infiltration, or improper workmanship and materials. Manholes or box inlet structures which fail to meet minimum construction standards shall be repaired or, if necessary, replaced, and reinspected.

103.04 Release of Performance Sureties

Notice of the scheduled date for completion of construction shall be provided to the the Big Cicero Creek Joint Drainage Board at least seventy-two (72) hours prior to its planned completion. The Contractor or Owner will schedule the final inspection, the storm drain and site grading performance sureties will be released after submittal and approval by the Big Cicero Creek Joint Drainage Board of the following information:

1. As-built or record drawings prepared under the supervision of and certified by a Professional Engineer or Land Surveyor registered in the State of Indiana, as described in Section 103.05 of this Manual.

2. For subdivided and platted or developments larger than two (2) acres, a copy of the maintenance bond, as required in Section 104-01 of this Manual, in a form approved by the Big Cicero Creek Joint Drainage Board.

3. A "Certificate of Completion and Compliance" certifying that the completed storm drainage system and stormwater management facilities substantially comply with construction plans and the stormwater management permit as approved by the Big Cicero Creek Joint Drainage Board.

That portion of the performance surety associated with the storm sewer system, detention facilities, and Post-Construction BMPs may be released by the Big Cicero Creek Joint Drainage Board prior to the release of performance surety associated with early permanent site stabilization or the installation of required erosion and sediment control measures for individual lots within a permitted subdivision. The performance surety associated with erosion and sediment control measures may only be released upon the final acceptance of the project and the issuance of the "verified" NOT in accordance with the requirements of Rule 5 (327 IAC 15-5), i.e., upon stabilization of the entire construction site and the removal of temporary erosion and sediment control measures, which may be achieved before or after the construction of all individual lots within a subdivision.

The above requirements may not be applicable if the required performance surety was waived by the Big Cicero Creek Joint Drainage Board as noted in Section 102.10 of this Manual.

103.05 As-built or Record Drawings

As part of the final acceptance process, record drawings of the stormwater facilities must be submitted to the Surveyor's Office of the County in which the project is located, as set forth herein, for the following types of developments:

- All platted subdivisions
- Industrial and commercial sites five acres and larger

After completion of construction of the project and before final project acceptance of the stormwater management plan (the issuance of a "verified" NOT), a professionally prepared and certified record drawings ('as-built' set of plans) by a Professional Engineer or licensed Land

Surveyor registered in the State of Indiana shall be submitted to the Surveyor's Office of the County in which the project is located for review. These as-built plans/record drawings must be prepared and certified by the Engineer of Record, i.e., the company/engineer who originally prepared the construction plans. Additionally, a digital copy of the record drawings ('as-built' plans) as well as finalized digital versions of all analyses, models, manuals, and reports that are consistent with the as-built conditions is required in a format accepted by the Surveyor's Office of the County in which the project is located. These plans shall include all pertinent data relevant to the completed storm drainage system and stormwater management facilities, and shall be in accordance with Record Drawing and Digital Submission Standards established under applicable ordinances of the appropriate jurisdiction within the Big Cicero Creek Watershed.

103.06 Enforcement of Standards

Failure to comply with those minimum guidelines set forth by the manual may result in Enforcement Action per applicable Storm Water Management Ordinances.

SECTION 104 POST-CONSTRUCTION MAINTENANCE REQUIREMENTS

104.01 Maintenance Surety

Stormwater quantity and quality management facilities shall be maintained in good condition, in accordance with the Operation and Maintenance procedures and schedules listed in the latest editions of the Indiana Stormwater Quality Manual or requirements contained in this Manual, and the terms and conditions of the approved stormwater permit, and shall not be subsequently altered, revised, or replaced except in accordance with the approved stormwater permit, or in accordance with approved amendments or revisions in the permit. Following construction completion and before the release of maintenance sureties described below, the maintenance of stormwater quantity or quality facilities may become the long-term responsibility of the Drainage Board of the County in which the project is located.

If the Drainage Board of the County in which the project is located accepts the petition for incorporation of parts of drainage infrastructure into their system, the following statement shall become part of the Restrictive Covenants of every platted subdivision and shown on recorded plat: "channels, tile drains, inlets and outlets of detention and retention ponds, and appurtenances thereto within designated regulated drainage easements are extensions of the (applicable Big Cicero Creek Waterhsed Jurisdiction) stormwater drainage system and are the responsibility of the (Drainage Board within which the project is located). Drainage swales and tile drains not accepted as regulated drains shall be the responsibility of owner or homeowner association."

The following statement shall be put on each subdivision plat: "A petition addressed to the (Drainage Board of the County within which the project is located) has been filed in duplicate with the County Surveyor, requesting that the subdivision's storm drainage system and its easements be accepted into the County's regulated drainage system. The storm drainage system and its easements that are accepted into the County's regulated drainage system are delineated on the plat as Regulated Drainage Easements (RDEs). Regulated Drainage Easements are stormwater easements and drainage rights of entry that are hereby dedicated to the public and to the (Drainage Board of the County within which the project is located) for the sole and exclusive purpose of controlling surface water and/or for the installation, operation, and maintenance of storm sewers and tile drains as defined in applicable Stormwater Management Ordinances. These drainage easements are established under authority of the Indiana Drainage Code and the said Board may exercise powers and duties as provided in said code (e.g., annual drainage assessment per lot). All other storm drainage easements have not been accepted into the County's system. All drainage improvements performed relative to the conveyance of stormwater runoff and the perpetual maintenance thereof, within the latter easements, shall be the responsibility of the owner or homeowner association. The (Drainage Board of the County within which the project is located)

and Big Cicero Creek Joint Drainage Board assume no responsibility relative to said improvements or the maintenance thereof.

If the (Drainage Board of the County within which the project is located) accepts the petition for incorporation of post-construction stormwater quality BMPs into their system, the following statement shall become part of the Restrictive Covenants of every platted subdivision and shown on the recorded plat: "The post-construction stormwater quality BMPs listed in the table below and located within designated regulated drainage easements are extensions of the (county within which the project is located)'s stormwater drainage system and are the responsibility of the (county within which the project is located) Drainage Board. Every lot owner in the subdivision is responsible for the maintenance costs associated with the noted post-construction stormwater quality BMPs."

The following statement shall be put on each subdivision plat: "A petition addressed to the (county within which the project is located) Drainage Board has been filed with the County Surveyor, requesting that the subdivision's post-construction stormwater quality BMPs, listed in the following table, and their associated easements be accepted into the County's regulated drainage system. The noted post-construction stormwater quality BMPs and their easements that are accepted into the County's regulated drainage system are delineated on the plat as Regulated Drainage Easements (RDEs). Regulated Drainage Easements are stormwater easements and drainage rights of way that are hereby dedicated to the public and to the (county within which the project is located), Indiana, Drainage Board for the sole and exclusive purpose of managing stormwater quality and quantity and/or for the installation, operation, and maintenance of stormwater quality BMPs, storm sewers, and tile drains as defined in applicable ordinances of the county within which the project is located. These drainage easements are established under authority of the Indiana Drainage Code and the Indiana Stormwater Utility Code, and the said Board may exercise powers and duties as provided in said codes (e.g., annual drainage assessment or stormwater/clean water fees per lot). All other storm drainage easements have not been accepted into the County's system. All drainage improvements performed relative to the conveyance and management of stormwater runoff quantity and quality, and the perpetual maintenance and cost thereof, within the latter easements, shall be the responsibility of every lot owner within the subdivision and the homeowners association. The (drainage Board of the County within which the project is located) and Big Cicero Creek Joint Drainage Board assumes no responsibility relative to said improvements or the maintenance thereof. This subdivision contains the following post-construction stormwater BMPs that will be included in the County's Regulated Drainage System." A table listing the name and location of every post-construction stormwater quality BMPs being accepted into the (county within which the project is located) Regulated Drainage System shall also be included immediately following the above statement on the recorded plat. A sample table is provided as Table 104-1.

The property owner, developer, or contractor shall be required to file a three-year maintenance bond or other acceptable guarantee with the Big Cicero Creek Joint Drainage Board and/or the (county within which the project is located) Board of Commissioners, prior to the release of Performance Sureties. Specifically, the said assurance is intended to guarantee that the following be properly maintained after the construction under the provisions of the (county within which the project is located)'s applicable stormwater management ordinance(s) and this Technical Standards:

- Post-Construction Erosion and sediment controls
- Storm sewer system
- Sub-Surface Drains (SSD)
- Detention facilities
- Post-Construction BMPs

The maintenance surety shall further be conditioned upon owner, developer, or contractor satisfactorily completing, within the three-year period following the completion of construction, such corrective actions as the Big Cicero Creek Joint Drainage Board and/or the Surveyor's Office of the County in which the project is located may determine are reasonably necessary to remedy

any damages to upstream or downstream channels or storm sewers resulting from the as-built development of the project.

Bonds or other acceptable guarantee are to run to the Big Cicero Creek Joint Drainage Board and/or the Board of Commissioners of the County in which the project is located. Said financial maintenance guarantee shall be conditioned upon the following:

1. A sum shall be fixed and approved by the Big Cicero Creek Joint Drainage Board and/or the Surveyor's Office of the County in which the project is located equal to twenty percent (20%) of the total estimated cost of all stormwater management improvements and installations provided in the construction drawings and accompanying data to specifications cited herein based on an estimate prepared by a professional engineer registered in the state of Indiana. Said costs shall be for the installation and ongoing monitoring and post-construction maintenance of storm drainage infrastructure, detention/retention facilities, and stormwater quality BMPs, as regulated under the applicable stormwater management ordinance(s) of the jurrisduction within which the project is located and this Technical Standards. Assurances shall be for a minimum of $5,000.
2. Each public facility improvement or installation provided in the final plat or accompanying data shall be bonded individually and shall not have the maintenance guarantee provided in combination with any of the other public facility improvements and installations.
3. The maintenance surety shall be issued in the name of the owner, developer, contractor or other responsible party as determined by the Big Cicero Creek Joint Drainage Board and/or the Surveyor's Office of the County in which the project is located.

104.02 Post-Construction Inspection

The Surveyor's Office of the County in which the project is located has the authority to perform long-term, post-construction inspection of all public or privately owned stormwater quantity and quality facilities. The inspections will follow the Operation and Maintenance procedures included in this Manual and/or permit application for each specific BMP. The inspection will cover physical conditions, available water quantity and quality storage capacity and the operational condition of key facility elements. Noted deficiencies and recommended corrective action will be included in an inspection report. If deficiencies are found during the inspection, the owner of the facility will be notified by the Surveyor's Office of the County in which the project is located and will be required to take all necessary measures to correct such deficiencies, unless the long-term maintenance of the subject drainage infrastructure or stormwater quality BMPs have been taken over by the Surveyor's Office of the County in which the project is located according to the procedures described in Section 104.01. For those BMPs that have not yet been taken over for maintenance by the Surveyor's Office of the County in which the project is located, if the owner fails to correct the deficiencies within the allowed time period, as specified in the notification letter, the Surveyor's Office of the County in which the project is located will undertake the work and collect from the owner using lien rights if necessary.

104.03 Release of Maintenance Sureties

The maintenance surety posted by the developer, owner, or the contractor shall run and be in force for a period of three (3) years from the date of release of the performance surety.

To verify that all enclosed drains are functioning properly, visual recordings (via closed circuit television) of such tile drains shall be required before release of maintenance sureties. These visual recordings will be scheduled at least 90 days prior to the expiration date of the maintenance bond. Reports summarizing the results of the noted visual recordings shall be reviewed and accepted by the Big Cicero Creek Joint Drainage Board and/or the Surveyor's Office of the

County in which the project is located before maintenance sureties would be recommended to be released.

SECTION 105 OTHER REQUIREMENTS

105.01 Floodplain Management

Floodplain management shall be in accordance with adopted floodplain regulations of the County in which the project is located. In addition to these regulations, the following floodplain policy is adopted by the Big Cicero Creek Joint Drainage Board.

The intent of Floodplain management is to protect against loss of property, protect human life, and maintain natural beneficial functions of floodplains in helping mitigate flooding and providing habitat and water quality benefits. Floodplains exist adjacent to all natural and man-made streams, regardless of contributing drainage area or whether they have been previously identified or mapped. Therefore, filling of the land in the floodplain of a regulated drain or any natural stream or watercourse that has a defined channel and a contributing drainage area of 25 acres or more, located within the Big Cicero Creek Watershed should be avoided. When the avoidance of floodplain disturbance is not practical, compensatory excavation equivalent to the floodplain storage lost shall be required for all activities within floodplain of streams and the natural functions of the floodplain should be preserved to the extent possible.

General Requirements for Compensatory Floodplain Storage

Note that by definition, compensatory storage is the replacement of the existing floodplain and, in rare exceptions, the floodway storage lost due to fill. Compensatory storage is required when a portion of the floodplain is filled, occupied by a structure, or when as a result of a project a change in the channel hydraulics occurs that reduces the existing available floodplain storage. Compensatory storage must:

- Be provided regardless of whether the flooding source is mapped or whether flood elevations are published or not. When flood elevations are not available for a flooding source that has a drainage area equal to or larger than 25 acres, the applicant is to determine the 10-year and 100-year flood elevations at the site and get them approved by the Big Cicero Creek Joint Drainage Board prior to use for floodplain compensation calculations. If the drainage area is larger than 640 acres, the determination shall require the IDNR approval.
- Equal at least 1 times the volume of flood storage lost below the 10-year and 100-year flood elevations;
- Be operational prior to placement of fill, structures, or other materials temporarily or permanently placed in the regulatory floodplain;
- Be provided in the immediate vicinity of the flood storage lost, where practical;
- Be provided in such a way to mimic as close as possible the function provided by the lost floodplain storage. If the floodplain storage is to be lost outside the active flow conveyance path, then it must be compensated for outside the flow conveyance path (e.g., a flood conveyance shelf/2-stage ditch, while improving conveyance and erosion, is not an appropriate compensation for floodplain storage lost in the floodway fringe area).
- Be provided in addition to the site retention/detention volume; and
- Drain freely and openly to the waterway.

Compensatory storage is also required to be provided incrementally such that:

- All floodplain storage/conveyance capacity lost within the floodway shall be compensated for within the floodway;

- All floodplain storage lost within the floodway fringe shall be compensated for within the floodway fringe;
- All floodplain storage lost below the existing 10-year flood elevation shall be compensated for below the proposed 10-year flood elevation; and
- All floodplain storage lost above the existing 10-year flood elevation shall be compensated for above the proposed 10-year flood elevation.

Note that compensatory storage is required for activities in the regulatory floodplain. There is no threshold to compensatory storage; any volume of fill requires compensatory storage be provided. However, the compensatory storage requirement does not apply to specific activities in the regulatory floodplain, such as the floodproofing of an existing building, where the floodproofing measures such as berms or floodwalls are within 10 feet of the building, or crossing improvements, where artificially created storage is lost due to a reduction in head loss.

Computing Compensatory Storage

Computations must show 1 times compensation for floodplain storage volume lost for 10-year and 100-year storm events. Storage lost between the existing ground and the existing 10-year flood elevation must be compensated by providing 1 times the amount lost and be placed between the existing ground elevation and the proposed 10-year floodplain elevation. Storage lost between the existing 10-year and the existing 100-year elevation must be compensated by providing 1 times the amount lost and be placed between the proposed 10-year elevation and proposed 100-year elevation.

When preparing a grading plan, thought should be given to how compensatory storage will be quantified. The most common methodology is the use of cross sections and the "average end area method". The following requirements should be followed when preparing cross sections:

1. Prepare a detailed topographic survey tied to North American Vertical Datum of 1988 and the local Survey Control Network benchmarks.

2. Locate cross sections parallel to each other and perpendicular to a reference line, often times a property line or fence line. Cross sections used in a hydraulic model are always perpendicular to flood flows, and not always parallel to each other. Therefore, these are often not suitable for computing flood fringe compensatory storage volumes.

3. Plot cross sections at a standard engineering scale so as to allow the reviewer to verify areas. Horizontal scale should be a maximum of 1"=50' and vertical scale should be a maximum of 1"=5', or as approved by the County.

4. Show existing grades, proposed grades, existing and proposed 10-year flood elevations, existing and proposed 100-year flood elevations, normal water level, a reference line, and floodway limits on the cross sections on the plans.

5. Locate cross sections no more than 150 feet apart, with a minimum of three cross sections per cut/fill area, or as necessary to accurately quantify cuts and fills.

6. Locate cross sections to pick up critical features such as berms, ditches, and existing and proposed structures.

7. Each cross section should be numbered or lettered and referenced on the plans.

This information is then utilized to compute the areas of cut and fill. A sample grading plan, a typical cross section, and associated compensatory storage calculations for the 10-year flood are provided on **Figures 105-1**, **Figure 105-2**, and **Table 105-1**, respectively.

Volume of Fill between cross sections are calculated by finding the average fill cross sectional area and multiplying it by the distance between the two cross sections. For example, the fill volume between cross sections A and B is calculated as follows:

Average Fill Area = (Fill Area "A" + Fill Area "B")/2 = (0 ft^2 +100 ft^2)/2 = 50 ft^2
Volume of Fill = (Average Fill Area) × (Distance) = (50 ft^2) × (150 ft) = 7,500 ft^3

Once the total volume of fill placed, for this example, between the 0-and 10-yr flood elevations is determined, the total required compensatory storage can be calculated and compared against the total compensatory storage volume provided by the design as shown in the table. For this example:

Required Compensatory Storage = (1) × (Total Volume of Fill) = (1) × (36,250 ft^3)
= 36,250 ft^3

Since the total amount of cut provided (37,525 ft^3 as shown in the table) is larger than that required (36,250 ft^3), the design meets the compensatory storage requirement for the 10-year flood. An additional table and calculation should be completed for the 100-year flood elevation in a similar manner to determine whether the design meets the compensatory storage requirement for the 100-year flood.

Location of Compensatory Storage
Compensatory storage must be located on-site and adjacent to or opposite the areas filled or occupied by a structure. In those rare instances when compensatory storage cannot be located adjacent to or opposite to the areas filled or occupied, engineering computations demonstrating that hydraulically equivalent compensatory storage has been provided is required. These computations must show that no increase in flood flows or flood depths will result as a result of the location of the proposed compensatory storage.

Compensatory storage must be constructed to drain freely and openly to watercourses. In some rare cases it may be necessary to install pipes to construct and/or operate a compensatory storage basin. This may occur when site constraints, such as a roadway or sidewalk, separate the waterway from the compensatory storage area. This is illustrated in the top half of **Figure 10-3**.

Another scenario may occur when a site cannot meet the incremental storage requirements discussed in this document. If incremental storage requirements from the 10-year to 100-year elevations cannot be met, pipes could be installed with a flap gate to prevent the water from entering from the stream bed at lower elevations. The berm could then be set at the elevation of the 10-year flood elevation, thus allowing the storage to only become effective above the 10-year flood elevation. This is illustrated in the bottom half of the illustration in Figure 10-3.

The use of pipes in compensatory storage will require approval by the County. If approved, two pipes will be required to reduce the risk of clogging. Pipes must be a minimum of 15 inches in diameter so as to allow water to enter and exit freely with a minimum head differential. If the compensatory storage is proposed to be combined with detention, it must be demonstrated the compensatory storage and detention do not interfere with one another.

Compensatory Storage in the Regulatory Floodway
Only fill associated with appropriate uses of the regulatory floodway will be allowed to fill within the limits of the floodway. All provisions discussed above relating to compensatory storage must be met in addition to the items discussed below.

- Any fill placed within the existing floodway must be compensated for within the proposed floodway.
- All floodway storage lost below the existing 10-year base flood elevation shall be replaced below the proposed 10-year base flood elevation.
- All floodway storage lost between the existing 10-year flood elevation and the existing 100-year flood elevation shall be replaced between the proposed 10-year and proposed 100-year flood elevation.

There shall be no reduction in floodway surface area as a result of a floodway modification, unless such modification is necessary to reduce flooding at an existing structure.

Determination of Floodplain Boundaries

Floodplain boundaries are to be determined by using the 100-year Base Flood Elevation (BFE) as shown on the Flood Insurance Rate Maps (FIRM) of the Federal Emergency Management Agency (FEMA), or the best available/calculated data if FIRM does not show the BFE, and the best available topographic mapping at the site.

A. If, during the process of using the BFE and the 1-foot topographic data, it is determined that the FIRM is incorrect, then a Letter of Map Revision (LOMR) to correct the FIRM is to be filed with FEMA. No filling of the floodplain, either the floodplain shown on the FIRM or the floodplain determined by the Floodplain Study, whichever is more conservative, will be allowed until an approved copy of the LOMR is provided to the Big Cicero Creek Joint Drainage Board.

B. If a FIRM does not establish a 100-year BFE for a regulated drain, natural stream, or natural watercourse, the 100-year BFE shall be established through a site specific Floodplain Study performed by a Professional Engineer registered in the State of Indiana.

1. If the drainage area for the Floodplain Study reach is greater than 1 square mile at the farthest downstream point of the study reach, then the Floodplain Study must be submitted to IDNR – Division of Water for approval and to the Big Cicero Creek Joint Drainage Board for review and comment. A copy of the final study, approved by IDNR-Division of Water, must be submitted to the Big Cicero Creek Joint Drainage Board as part of the project requiring the study to be completed. . Upon acceptance of the Floodplain Study by IDNR – Division of Water, a Letter of Map Revision (LOMR) is to be filed with FEMA to incorporate the new Floodplain Study into the new FIRM panels.

2. If the drainage area for the Floodplain Study reach is less than 1 square mile at the farthest downstream point of the study reach, then the Floodplain Study must be submitted to the Big Cicero Creek Joint Drainage Board for review and approval. The methodology for determining the BFE shall be in accordance to Chapters 200 and 300 of these Standards. If the applicant is seeking credit for existing detention/retention facilities in the watershed, such detention/retention facilities must be incorporated in the modeling using as-built conditions. The Big Cicero Creek Joint Drainage Board will have the option to send the Floodplain Study to a consulting engineering firm for review and comment, should the accuracy of the Floodplain Study be in question. The cost of the consulting engineering firm's time will be the responsibility of the owner of the project and will need to be consented to in a written agreement prior to any review of the Floodplain Study by the consulting engineer.

The requirements of this subsection do not apply to the following:

1. Agricultural practices such as crop production, pastures, orchards, tree farms, planting nurseries, vineyards, and general farming. However, these practices may not result in any fill within the floodplain.

2. Forestry, wildlife areas and nature preserves.

3. County, City, or Township Parks

4. Public Streets, bridges, and roadways, as long as the crossing structure are properly sized to convey the natural stream or watercourse and not raise the 100-year BFE.

5. Regional Detention Basins approved by the Big Cicero Creek Joint Drainage Board. (By definition, a regional pond is a pond that detains all tributary on-site and off-site flows upstream of its outlet.)

105.02 Grading and Building Pad Elevations

Maximum yard slopes are 3:1 where soil has been disturbed during construction processes. Finished floor elevation or the lowest building entry elevation must be no less than 6 inches above finished grade around the building. Also, the building's lowest entry elevation that is adjacent to and facing a road shall be a minimum of 15 inches above the road elevation.

All buildings shall have a minimum flood protection grade shown on the secondary plat. Minimum Flood Protection Grade of all structures fronting a pond or open ditch shall be no less than 2 feet above any adjacent 100-year local or regional flood elevations, whichever is greater, for all windows, doors, attached garage entries, unsealed pipe entrances, window well rim elevations, and any other structure member where floodwaters can enter a building.

For all structures located in the Special Flood Hazards Area (SFHA) as shown on the FEMA maps, the lowest floor elevations of all residential, commercial, or industrial buildings shall be such that Lowest Floor elevation, including basement, shall be at the flood protection grade and therefore have 2 feet of freeboard above the 100-year flood elevation.

The Lowest Adjacent Grade for residential, commercial, or industrial buildings outside a FEMA or IDNR designated floodplain shall have two (2) feet of freeboard above any applicable local or regional flooding sources' 100-year flood elevation under proposed conditions, whichever is greater. Lowest Adjacent Grade is the elevation of the lowest grade adjacent to a structure, where the soil meets the foundation around the outside of the structure (including structural members such as basement walkout, attached garage entries, patios, decks, porches, support posts or piers, and rim of the window well.

For areas outside a FEMA or IDNR designated floodplain, the Lowest Adjacent Grade (including walkout basement floor elevation) for all residential, commercial, or industrial buildings adjacent to ponds shall be set a minimum of 2 feet above the 100-year pond elevation or 2 feet above the emergency overflow weir elevation, whichever is higher. In addition to the Lowest Adjacent Grade requirements, any basement floor must be at least a foot above the permanent water level (normal pool elevation).

Special considerations, based on detailed geotechnical analysis, should be made prior to considering placement of any basement below the 100-year flood elevation of an adjacent flooding source or pond.

The LAG requirements for buildings adjacent to overflow path/ponding areas are discussed in Section 303.07 of this Manual. In case there are more than one flooding sources applicable to a building site, the highest calculated LAG for the building shall govern the placement of the building on that site.

105.03 Policy on Dams and Levees

Dams and levees have the potential for significant, sometimes catastrophic consequences should they fail. In order to minimize the potential for loss of life and public safety, decrease the potential for increased flood damage and disaster costs, and safeguard the downstream property rights, the following shall be required for any proposed new or improvements to any existing dam or levee. These requirements are in addition to what is normally required for other development subject to this Ordinance and/or that required by State or Federal agencies.

A. Design of dams shall follow the requirements of the latest edition of IDNR-Division of Water "General Guidelines for New Dams and Improvements to Existing Dams in Indiana" as well as principles provided in the latest edition of "Indiana Dam Safety Inspection Manual".

B. Design of levee/floodwalls shall follow the FEMA requirements and guidelines provided in 44 CFR Section 65.10 and USACE Engineer Manual 1110-2-193, Design and Construction of Levees.

C. An Emergency Action Plan (EAP), including a detailed dam breach inundation map, shall be developed in accordance with the template provided in the latest edition of "Indiana Dam Safety Inspection Manual" and submitted to the HCSO. The detailed dam breach inundation map referenced in this paragraph shall be developed for both "Sunny Day Breach" Scenario (breach during normal loading conditions) and for maximum loading condition with breach assumed to occur as the spillway system is passing the Spillway Design Flood associated with the dam ("SDF + Breach" Scenario).

D. Unless the "Sunny Day Breach Inundation Area" is entirely contained within the applicant's property and/ or contained within the existing 1% annual chance (100-year) floodplain, a copy of recorded flood/inundation easement or a recorded written consent for every property within the potential "Sunny Day Breach Inundation Area" shall be submitted to the Surveyor's office of the county in which project is located in. In addition, all the affected property owners whose properties are located within the "SDF + Breach Inundation Area" must be notified of a hearing relevant to the proposed added risk. Notification of the time and place of the hearing shall be made in person or by certified mail at least five (5) to ten (10) days prior to the hearing. Proof of notice to each landowner shall be filed by affidavit with the Surveyor's office of the county in which project is located in prior to the hearing.

E. A copy of a Management and Maintenance Plan for the proposed dam or levee developed in accordance with the latest edition of "Indiana Dam Safety Inspection Manual" shall be submitted to the Surveyor's office of the county in which project is located in.

F. Following the permitting and construction of the dam or levee, a copy of a formal periodic inspection report prepared in accordance with the recommendations contained in the latest edition of "Indiana Dam Safety Inspection Manual" shall be submitted to the Surveyor's office of the county in which project is located in along with evidence that the identified maintenance deficiencies have been corrected. The inspection report has to be submitted as it gets completed in accordance with the inspection frequency recommended in the latest edition of "Indiana Dam Safety Inspection Manual".

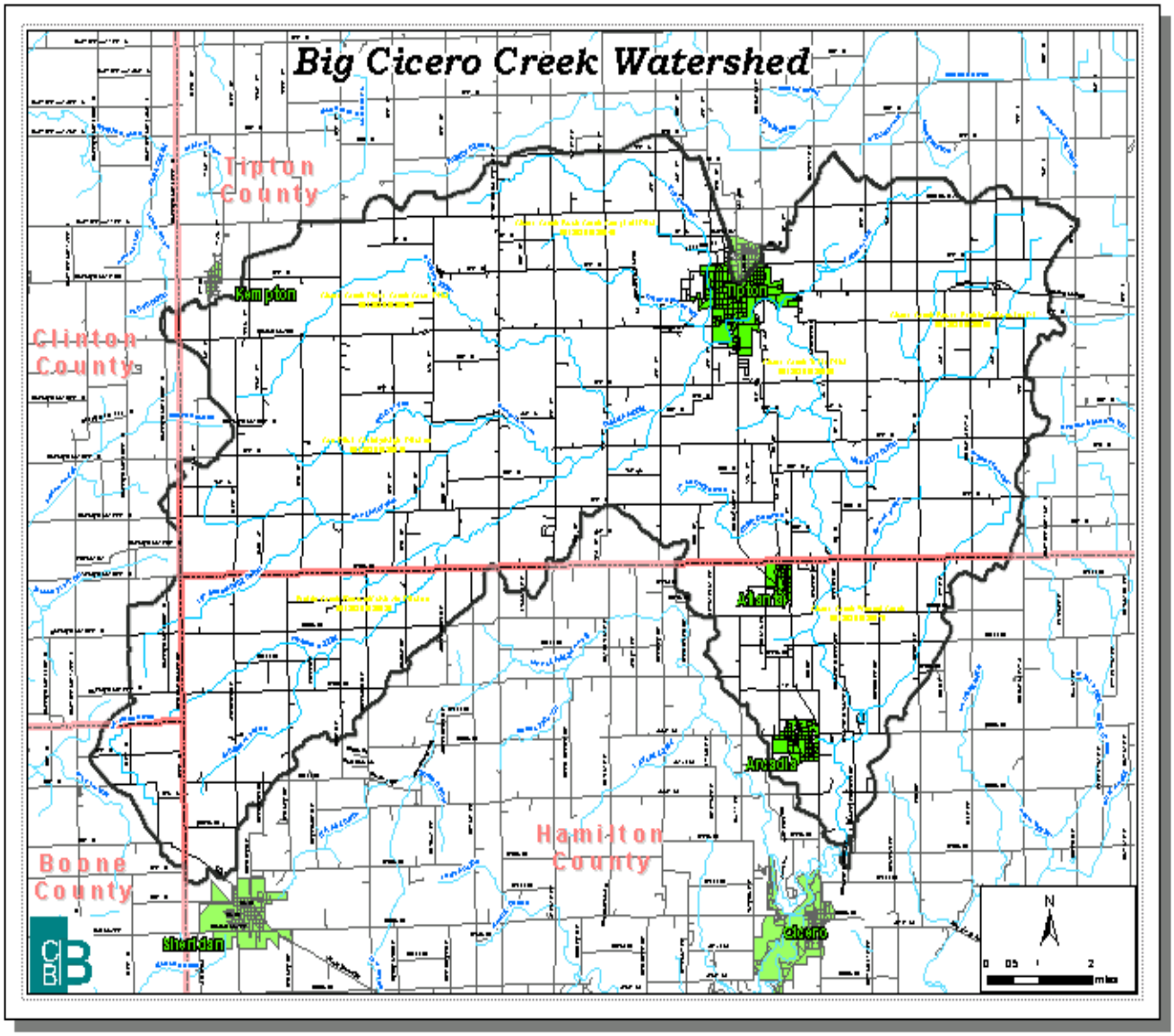

Figure 101-1: Big Cicero Creek Watershed Boundary

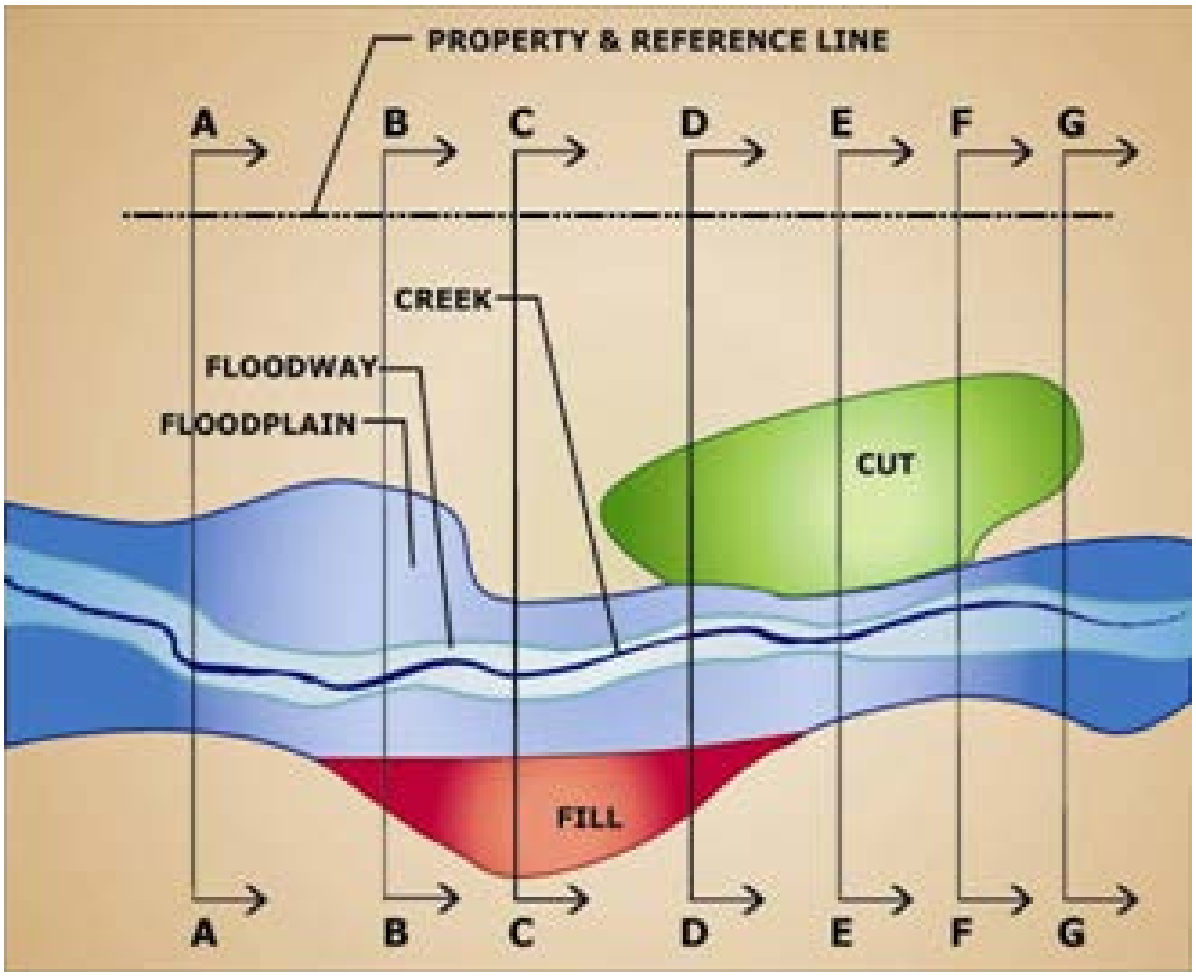

* Not to Scale & Topography not shown for clarity.

Figure 105-1 - Example Compensatory Storage Grading Plan

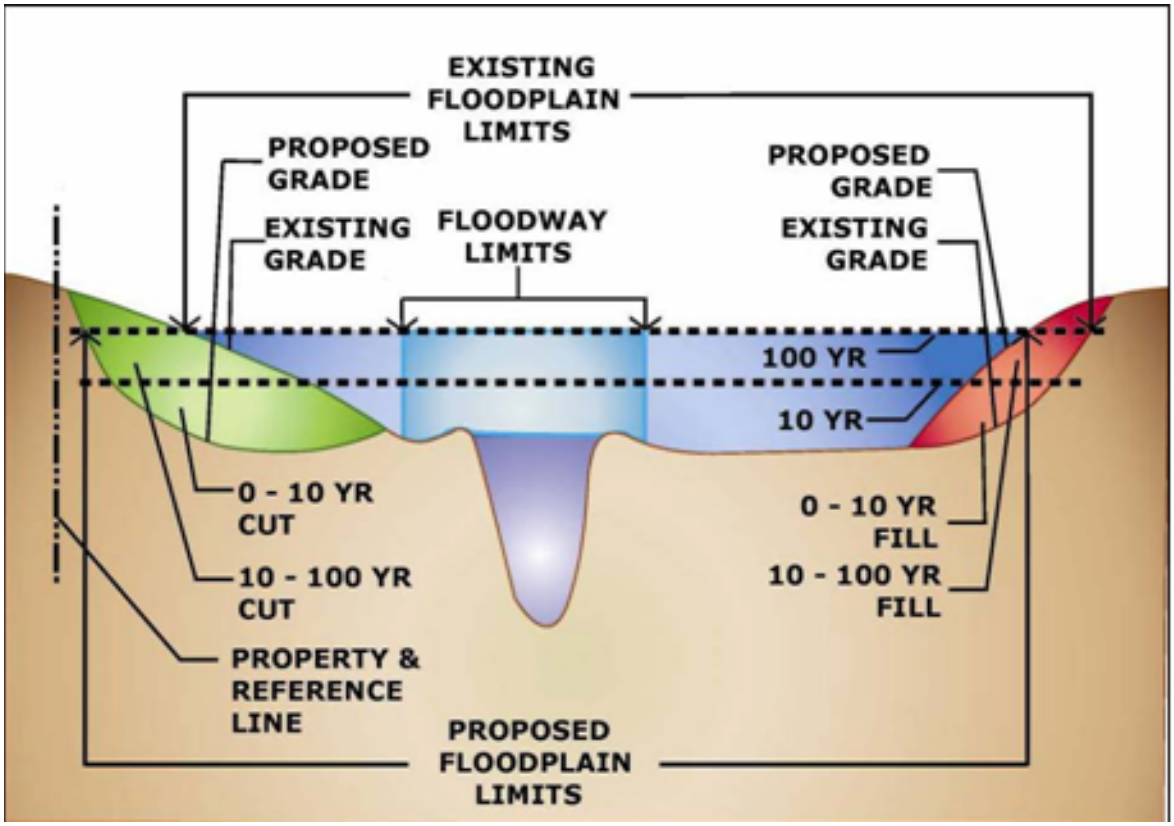

Figure 105-2 – Example Cross Section D-D

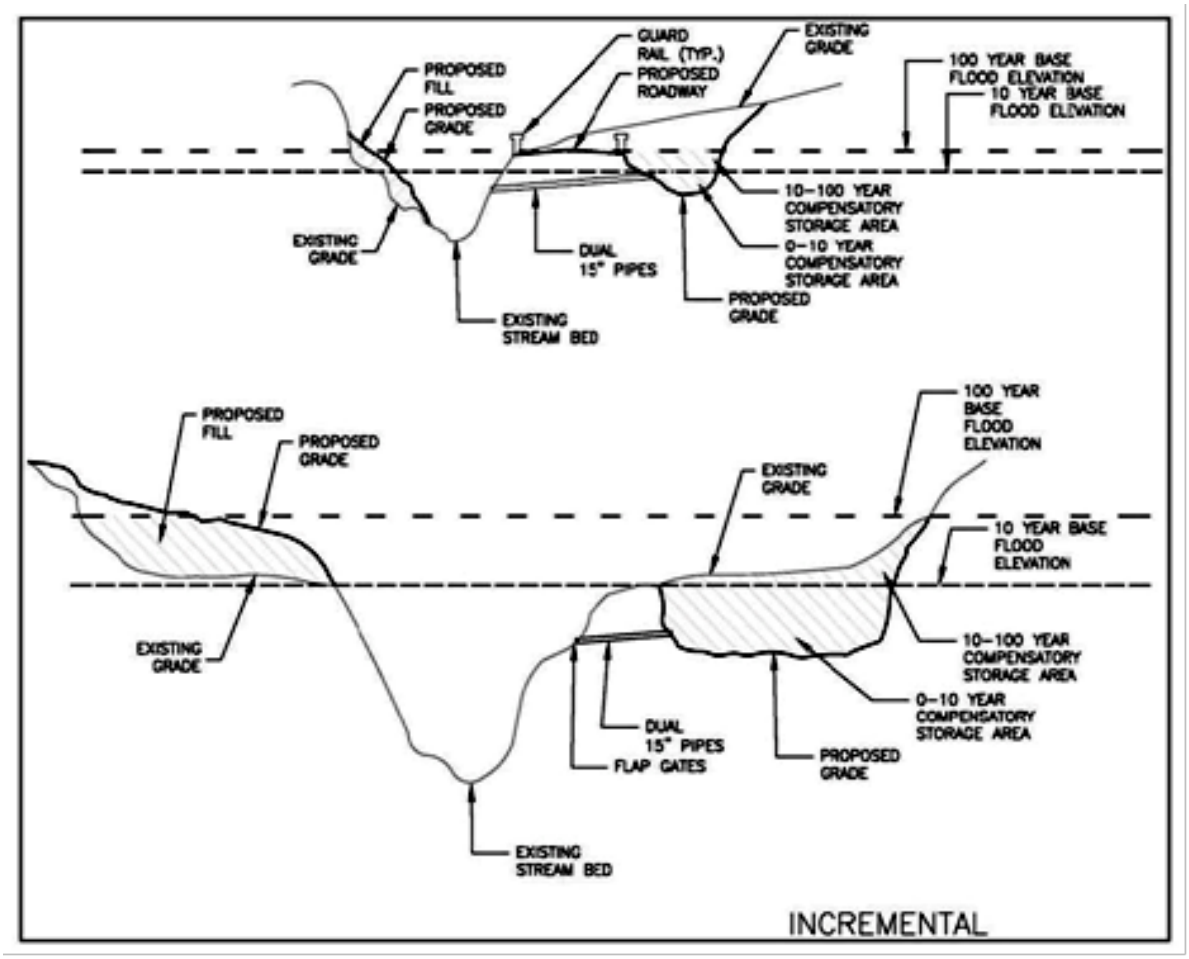

Figure 10-3 – Example of Compensatory Storage Connection to Stream through Pipe

SITE OUTLET #	ITEM	PRE-DEVELOPMENT					POST-DEVELOPMENT				
		D.A. (ac)	Depress. Storage? (yes/no)	2-Yr.	10-Yr.	100-Yr.	D.A. (ac)	Depress. Storage? (yes/no)	2-Yr.	10-Yr.	100-Yr.
1	Default Unit Discharge Allowable Release Rate (cfs/acre)									0.1	0.3
	Basin-Specific Unit Discharge Allowable Release Rate, if any (cfs/acre)										
	Unit Discharge Allowable Release Rate Based on D/S Restrictions, if any (cfs/acre)										
	Adopted Unit Discharge Allowable Release Rate (cfs/acre)										
	Contributing Area of Development Site (ac) and Allowable Release Rate (cfs)										
	Total Contributing DA (ac) and Modeling Results (cfs)							no			

Table 102-1: Allowable Release rate Determination and Modeling Results

Structure Number	BMP Name	BMP Description	BMP Location

Table 104-1: Listing of Post-Construction Stormwater Quality BMPs Proposed to be Accepted as Part of (county within which the project is located) Regulated Drainage System

Cross Section	Distance Between Sections (ft.)	Fill Area (sq. ft.)	Average Fill Area (sq. ft.)	Volume of Fill (cu. Ft.)	Cut Area (sq. ft.)	Average Cut (sq. ft.)	Volume of Cut (cu. Ft.)
A		0			0		
	150		50	7,500		0	
B		100			0		
	90		125	11,250		20	1,800
C		150			40		
	100		125	12,500		65	6,500
D		100			90		
	100		50	5,000		100	10,000
E		0			110		
	100		0	0		120	12,000
F		0			130		
	85		0	0		85	7,225
G		0			40		
Total Fill				**36,250**	Total Cut		**37,525**

Table 105-1 - Example Compensatory Storage Calculations for 0-10 year event

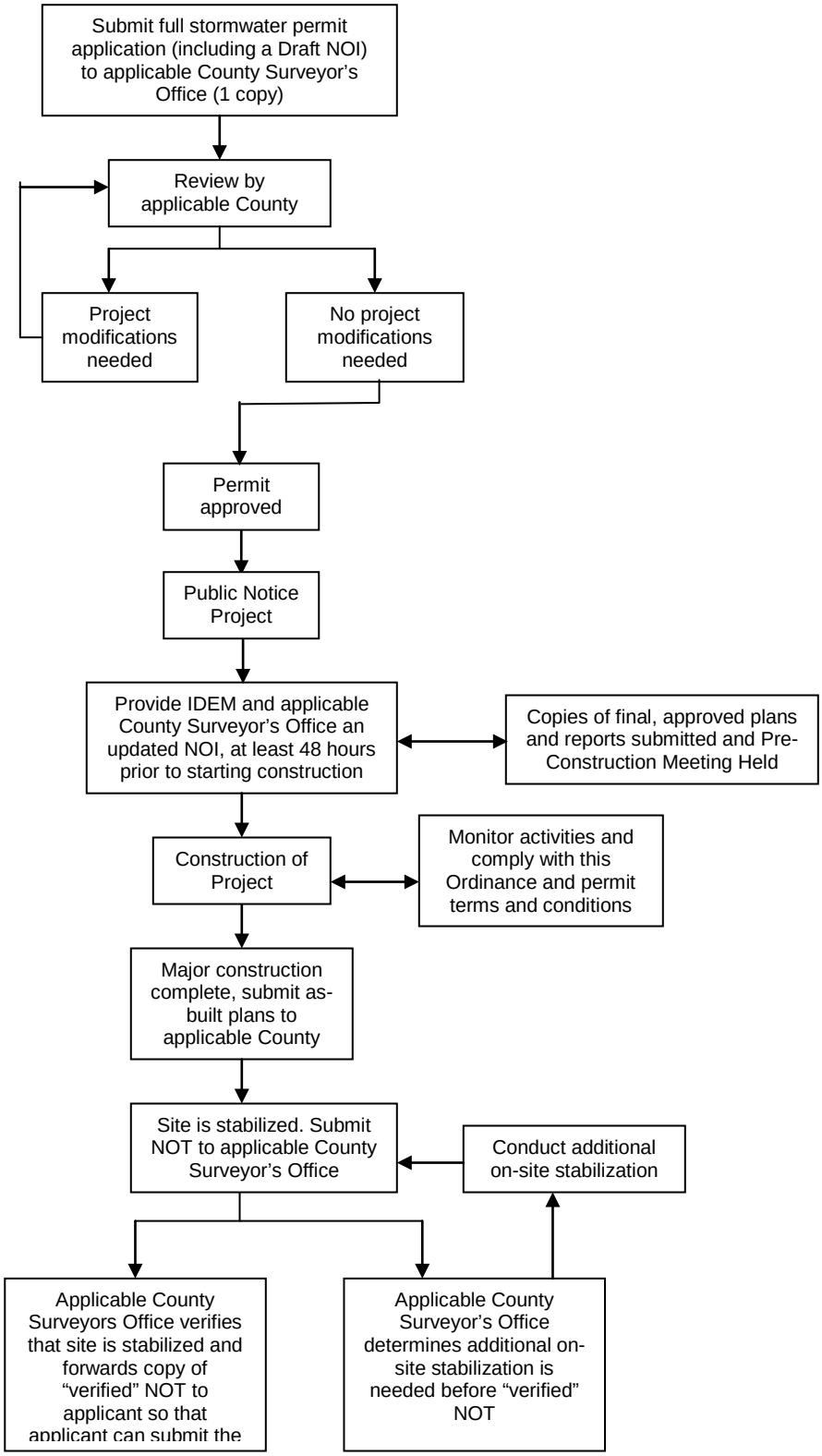

Exhibit 102-1: Flow Chart of the Stormwater Plan Review/Permit Process

CHAPTER 200 HYDROLOGY

SECTION 201 BASIC POLICIES AND REQUIREMENTS

The following section provides a list of design policies which must be applied during a hydrologic analysis performed within the Big Cicero Creek Watershed.

201.01 Abbreviations and Definitions

Following are discussions of concepts which will be important in a hydrologic analysis. These concepts will be used throughout the remainder of this chapter in dealing with different aspects of hydrologic studies.

Abbreviations

COE:	United States Army Corps of Engineers
IDEM:	Indiana Department of Environmental Management
IDNR:	Indiana Department of Natural Resources
INDOT:	Indiana Department of Transportation
NRCS:	USDA-Natural Resources Conservation Service
USDA:	United States Department of Agriculture

Definitions

Antecedent Moisture Condition:	The index of runoff potential before a storm event. The index, developed by the Natural Resource Conservation Service (NRCS), is an attempt to account for the variation of the NRCS runoff curve number (CN) from storm to storm.
Catch Basin:	A chamber usually built at the curb line of a street for the admission of surface water to a storm drain or subdrain, having at its base a sediment sump designed to retain grit and detritus below the point of overflow.
Channel:	A portion of a natural or artificial watercourse which periodically or continuously contains moving water, or which forms a connecting link between two bodies of water. It has a defined bed and banks which serve to confine the water.
Culvert:	A closed conduit used for the conveyance of surface drainage water under a roadway, railroad, canal or other impediment.

Curve Number:	The NRCS index that represents the combined hydrologic effect of soil, land use, land cover, hydrologic condition and antecedent runoff condition.
Depression Storage:	Non-riverine depressions in the earth where stormwater collects. The volumes are often referred to in units of acre-feet.
Design Storm:	A selected storm event, described in terms of the probability of occurring once within a given number of years, for which drainage or flood control improvements are designed and built.
Drainage Area:	The area draining into a stream at a given point. It may be of different sizes for surface runoff, subsurface flow and base flow, but generally the surface runoff area is considered as the drainage area.
Duration:	The time period of a rainfall event.
Hydrograph:	For a given point on a stream, drainage basin, or a lake, a graph showing either the discharge, stage (depth), velocity, or volume of water with respect to time.
Infiltration:	Passage or movement of water into the soil.
Inlet:	An opening into a storm drain system for the entrance of surface storm water runoff, more completely described as a storm drain inlet.
Major Drainage System:	Drainage system carrying runoff from an area of one or more square miles.
Minor Drainage System:	Drainage system carrying runoff from an area of less than one square mile.
Peak Discharge:	The maximum instantaneous flow from a given storm condition at a specific location.
Rainfall Intensity:	The rate at which rain is falling at any given instant, usually expressed in inches per hour.

Runoff: That portion of precipitation that flows from a drainage area on the land surface, in open channels, or in stormwater conveyance systems.

Storm Frequency: The time interval between major storms of predetermined intensity and volumes of runoff (e.g. a 5-yr., 10-yr., or 20-yr. storm).

Storm Sewer: A closed conduit for conveying collected storm water, while excluding sewage and industrial wastes. Also called a storm drain.

Swale: An elongated depression in the land surface that is at least seasonally wet, is usually heavily vegetated, and is normally without flowing water. Swales conduct stormwater into primary drainage channels and may provide some groundwater recharge.

Time of Concentration: The travel time of a particle of water from the most hydraulically remote point in the contributing area to the point under study. This can be considered the sum of an overland flow time and times of travel in street gutters, storm sewers, drainage channels, and all other drainage ways.

Watercourse: Any river, stream, creek, brook, branch, natural or man-made drainageway in or into which stormwater runoff or floodwaters flow either continuously or intermittently.

Watershed: The region drained by or contributing water to a specific point that could be along a stream, lake or other stormwater facilities. Watersheds are often broken down into subareas for the purpose of hydrologic modeling.

Symbol Table: To provide consistency within this chapter as well as throughout this manual the following symbols will be used. These symbols were selected because of their wide use in hydrologic publications. In some cases the same symbol is used in existing publications for more than one definition. Where this occurs in this chapter, the symbol will be defined where it occurs in the text or equations.

Symbols	Definition	Units
A	Drainage Area	acres
C	Runoff Coefficient	-
CN	NRCS-runoff curve number	-
D	Duration	hours
I	Rainfall intensity	in/hr
n	Manning roughness coefficient	-
Q	Rate of runoff	cfs
q_p	Peak rate of discharge	cfs
t_c or T_c	Time of concentration	min
V	Velocity	ft/s

201.02
Hydrologic
Methods

Runoff rates shall be computed for the area of the parcel under development plus the area of the watershed flowing into the parcel under development. The rate of runoff which is generated as the result of a given rainfall intensity may be calculated as follows:

A. Development Sites Less than or Equal to 5 Acres in Size, With a Contributing Drainage Area Less than or Equal to 50 Acres and No Depressional Storage

The Rational Method may be used. A computer model, such as TR-55 (NRCS), TR-20 (NRCS), HEC-HMS (COE), and HEC-1 (COE), that can generate hydrographs based on the NRCS TR-55 time of concentration and curve number calculation methodologies may also be used along with a 24-hour duration NRCS Type 2 storm. Note that for the purpose of determining the post-developed conditions curve numbers, due to significant disturbance to the upper soil layers during the construction activities, the initially determined hydrologic soil group for disturbed areas should be changed to the next less infiltrating capacity category (i.e., A to B, B to C, and C to D).

LID Exception: If Low Impact Development (LID) approach is pursued in satisfying the requirements noted in Chapter 700 (Post-Construction Stormwater Quality Management), the post-developed CN for the protected undisturbed or restored disturbed areas meeting the requirements described in Chapter 700 and BMP Fact Sheets may be determined based on pre-development underlying soil layer.

In the Rational Method, the peak rate of runoff, Q, in cubic feet per second (cfs) is computed as:

$$Q = CIA$$

Where: C = Runoff coefficient, representing the characteristics of the drainage area and defined as the ratio of runoff to rainfall.

I = Average intensity of rainfall in inches per hour for a duration equal to the time of concentration (t_c) for a selected rainfall frequency.

A = Tributary drainage area in acres.

Values for the runoff coefficient "C" are provided in Table 201-1, which shows values for different types of surfaces and local soil characteristics. The composite "C" value used for a given drainage area with various surface types shall be the weighted average value for the total area calculated from a breakdown of individual areas having different surface types.

Rainfall intensity shall be determined from the rainfall frequency data shown in Table 201-2.

In general, the time of concentration (t_c) methodology to be used for all stormwater management projects within the Big Cicero Creek Watershed shall be as outlined in the U.S. Department of Agriculture (USDA) - NRCS TR-55 Manual. In urban or developed areas, the methodology to be used shall be the sum of the inlet time and flow time in the stormwater facility from the most remote part of the drainage area to the point under consideration. The flow time in the storm sewers may be estimated by the distance in feet divided by velocity of flow in feet per second. The velocity shall be determined by

the Manning's Equation (see Chapter 300). Inlet time is the combined time required for the runoff to reach the inlet of the storm sewer. It includes overland flow time and flow time through established surface drainage channels such as swales, ditches, and sheet flow across such areas as lawns, fields, and other graded surfaces.

B. Development Sites Greater Than 5 Acres in Size or Contributing Drainage Area Greater than 50 Acres or With Significant Depressional Storage

The runoff rate for these development sites and contributing drainage areas shall be determined by a computer model that can generate hydrographs based on the NRCS TR-55 time of concentration and curve number calculation methodologies and the 24-hour NRCS Type 2 Rainfall Distribution. Note that for the purpose of determining the post-developed conditions curve numbers, due to significant disturbance to the upper soil layers during the construction activities, the initially determined hydrologic soil group for disturbed areas should be changed to the next less infiltrating capacity category (i.e., A to B, B to C, and C to D).

> **LID Exception:** If Low Impact Development (LID) approach is pursued in satisfying the requirements noted in Chapter 700 (Post-Construction Stormwater Quality Management), the post-developed CN for the protected undisturbed or restored disturbed areas meeting the requirements described in Chapter 700 and BMP Fact Sheets may be determined based on pre-development underlying soil layer.

The 24-hour Rainfall depth for various frequencies shall be taken from Table 201-3. The NRCS Type 2 distribution ordinates are found in Table 201-4. Examples of computer models that can generate such hydrographs include TR-55 (NRCS), TR-20 (NRCS), HEC-HMS (COE), and HEC-1 (COE). These programs may be downloaded free of charge from the associated agencies' web sites. The computer models ICPR and Pond Pack may also be used. However, the latter computer software are proprietary. If interconnected ponds are utilized, the use of ICPR or Pond Pack may be required to appropriately model the more complex hydrologic and hydraulic relationships associated with such system. Other models may be acceptable and should be accepted by the Big Cicero Creek Joint Drainage Board prior to their utilization.

C. Development Sites with Drainage Areas Greater than or Equal to One Square Mile

For the design of any major drainage system, as defined in Section 201.01, the discharge must be obtained from, or be accepted by, the IDNR. Other portions of the site must use the discharge methodology in the applicable section of this Chapter.

201.03
Design Storm
Frequencies

The design storm frequency is the basis for all runoff computations and stormwater facility designs. All stormwater facilities, whether private or public, and whether constructed on private or public property, shall conform to the design standards and other requirements contained herein.

1. All storm sewers, inlets, catch basins, and street gutters shall accommodate (subject to the "allowable spread" provisions discussed later in this Section), as a minimum, peak runoff from a 10-year return frequency storm calculated based on methodology described in Section 201.02. Any upstream, off-site runoff being bypassed through the development's storm sewer system must be accommodated for the 10-year event, with overland flow path provisions considered for bypassing flows in excess of the 100-year event. Additional discharges to storm sewer systems allowed in Section 501.06 must also be considered in all design calculations. For Rational Method analysis, the

duration shall be equal to the time of concentration for the drainage area. In computer based analysis, the duration is as noted in the applicable methodology associated with the computer program.

2. Culverts and bridges shall be capable of accommodating, without overtopping the road, peak runoff from a 100-year frequency storm when crossing under a road which is part of the Thoroughfare Plan of the County in which the project is loctated or is classified as freeway, arterial, parkway, and/or collectors by the Zoning Ordinance of the County in which the project is located or provides the only access to and from any portion of any commercial or residential developments. Bridges that meet the above threshold shall also have a minimum of 2 feet of freeboard below the low chord (lowest structural member) of the bridge structure for the design 100-year flood.

3. For portions of the system considered minor drainage systems, the allowable spread of water on Collector Streets is limited to maintaining two clear 10-foot moving lanes of traffic. One lane is to be maintained on local roads, while other access lanes (such as a subdivision cul-de-sac) can have a water spread equal to one-half of their total width.

4. To ensure access to buildings and allow the use of the roadway by emergency vehicles during storms larger than the design storm, an overflow channel/swale between sag inlets and overflow paths or basin shall be provided at sag inlets so that the maximum depth of water that might be ponded in the street sag shall not exceed 7 inches measured from elevation of gutter.

5. Stormwater facilities functioning as a major drainage system as defined in Section 201.01 must also meet IDNR design standards in addition to Big Cicero Creek Joint Drainage Board standards. In case of discrepancy, the most restrictive requirements shall apply.

6. All channels and swales shall accommodate, as a minimum, peak runoff from a 10-year return frequency storm calculated based on methodology described in Section 201.02. For Rational Method analysis, the storm duration shall be equal to the time of concentration for the drainage area. In computer-based analysis, the duration is as noted in the applicable methodology associated with the computer program.

7. Channels with a carrying capacity of more than 30 cfs at bank-full stage shall be capable of accommodating peak runoff for a 50-year return frequency storm within the drainage easement.

8. The 10-year storm design flow for residential rear and side lot swales shall not exceed 4 cfs. The maximum length of rear and side lot swales before reaching any inlet shall not exceed 3 residential lots or 300 feet, whichever is shorter, unless designed as a stormwater quality BMP that meets the design criteria provided in Appendix 701-1 of Chapter 700.

9. Regardless of minimum <u>design</u> frequencies stated above, the performance of all parts of drainage system shall be <u>checked</u> for the 100-year flow conditions to insure that all buildings are properly located outside the 100-year flood boundary and that flow paths are confined to designated areas with sufficient easement.

TYPE OF SURFACE	RUNOFF COEFFICIENT ©
Non-Urban Areas	
Bare earth	0.55
Steep grassed areas (slope 2:1)	0.60
Turf meadows	0.25
Forested areas	0.20
Cultivated fields	0.30
Urban Areas	
All watertight roof surfaces	0.90
Pavement	0.85
Gravel	0.85
Impervious soils (heavy)	0.55
Impervious soils (with turf)	0.45
Slightly pervious soil	0.25
Slightly pervious soil (with turf)	0.20
Moderately pervious soil	0.15
Moderately pervious soil (with turf)	0.10
Business, Commercial & Industrial	0.85
Apartments & Townhouses	0.70
Schools & Churches	0.55
Single Family Lots < 10,000 SF	0.45
Lots < 12,000 SF	0.45
Lots < 17,000 SF	0.40
Lots > ½ acre	0.35
Park, Cemetery or Unimproved Area	0.30

TABLE 201-1: Runoff Coefficients © for Use in the Rational Method

	Rainfall Intensity (Inches/Hour)						
Duration	*Return Period (Years)*						
	1	2	5	10	25	50	100
5 Min.	4.68	5.08	6.38	7.37	8.51	9.44	10.31
10 Min.	3.64	3.97	4.96	5.69	6.51	7.15	7.76
15 Min.	2.97	3.23	4.06	4.66	5.36	5.9	6.43
30 Min.	1.97	2.16	2.78	3.24	3.78	4.22	4.64
1 Hr.	1.2	1.33	1.74	2.06	2.45	2.78	3.1
2 Hrs.	0.7	0.77	1.02	1.22	1.47	1.69	1.91
3 Hrs.	.494	0.55	0.72	0.87	1.05	1.21	1.37
6 Hrs.	0.293	0.32	0.43	0.52	0.63	0.72	0.82
12 Hrs.	0.172	0.19	0.25	0.3	0.36	0.41	0.46
24 Hrs.	0.100	0.11	0.15	0.17	0.2	0.23	0.26

Source: NOAA, National Weather Service, "Precipitation-Frequency Atlas of the United States", NOAA Atlas 14, Volume 2, Version 2, 2004, for Tipton, Indiana. (values for intermediate durations can be logarithmically interpolated.)

TABLE 201-2: Rainfall Intensities for Various Return Periods and Storm Durations

	Rainfall Depth (Inches)						
Duration	*Return Period (Years)*						
	1	2	5	10	25	50	100
24 Hrs.	2.40	2.66	3.51	4.11	4.92	5.55	6.21

Source: NOAA, National Weather Service, "Precipitation-Frequency Atlas of the United States", NOAA Atlas 14, Volume 2, Version 2, 2004, for Tipton, Indiana.

TABLE 201-3: Rainfall Depths for Various Return Periods

NRCS Type II Rainfall Distribution Ordinates			
Cumulative Percent of Storm Time	*Cumulative Percent of Storm Depth*	*Cumulative Percent of Storm Time*	*Cumulative Percent of Storm Depth*
0	0	52	73
4	1	53	75
10	2.5	54	77
15	4	55	78
20	6	56	80
25	8	57	81
30	10	58	82
33	12	60	83.5
35	13	63	86
38	15	65	87
40	16.5	67	88
42	19	70	89.5
43	20	72	91
44	21	75	92
45	22	77	93
46	23	80	94
47	26	83	95
48	30	85	96
48.5	34	87	97
48.7	37	90	98
49	50	95	99
50	64	100	100
51	71		

TABLE 201-4: NRCS Type 2 Rainfall Distribution Ordinates
(for use when <u>not</u> already built in the computer program)

CHAPTER 300 HYDRAULICS AND HYDRAULIC STRUCTURES

SECTION 301 INTRODUCTION

This chapter provides policies and technical procedures for analyzing the majority of stormwater facilities required for land alteration projects. However, more detailed analyses may be required depending on the specific site characteristics. Also, a set of standard detail drawings may be available through the Big Cicero Creek Joint Drainage Board that provides guidance on the design of various hydraulic structures that may not have been covered in this chapter. Adherence to the noted standard details shall be required in addition to other requirements in this chapter. In case of discrepancy, the most restrictive requirement shall apply.

301.01
Abbreviations and Definitions

Abbreviations

BMP:	Best Management Practice
COE:	United States Army Corps of Engineers
IDEM:	Indiana Department of Environmental Management
IDNR:	Indiana Department of Natural Resources
INDOT:	Indiana Department of Transportation
NRCS:	USDA-Natural Resources Conservation Service (formerly SCS)
USDA:	United States Department of Agriculture

Definitions

Antecedent Moisture Condition:	The index of runoff potential before a storm event. The index, developed by the Natural Resource Conservation Service (NRCS), is an attempt to account for the variation of the NRCS runoff curve number (CN) from storm to storm.
Catch Basin:	A chamber usually built at the curb line of a street for the admission of surface water to a storm drain or subdrain, having at its base a sediment sump designed to retain grit and detritus below the point of overflow.
Channel:	A portion of a natural or artificial watercourse which periodically or continuously contains moving water, or which forms a connecting link

between two bodies of water. It has a defined bed and banks which serve to confine the water.

Culvert: A closed conduit used for the conveyance of surface drainage water under a roadway, railroad, canal or other impediment.

Curve Number: The NRCS index that represents the combined hydrologic effect of soil, land use, land cover, hydrologic condition and antecedent runoff condition.

Depression Storage: Non-riverine depressions in the earth where stormwater collects. The volumes are often referred to in units of acre-feet.

Design Storm: A selected storm event, described in terms of the probability of occurring once within a given number of years, for which drainage or flood control improvements are designed and built.

Drainage Area: The area draining into a stream at a given point. It may be of different sizes for surface runoff, subsurface flow and base flow, but generally the surface runoff area is considered as the drainage area.

Dry-bottom Detention Basin: A basin designed to be completely dewatered after having provided its planned detention of runoff during a storm event

---

Duration: The time period of a rainfall event.

Hydrograph: For a given point on a stream, drainage basin, or a lake, a graph showing either the discharge, stage (depth), velocity, or volume of water with respect to time.

Infiltration: Passage or movement of water into the soil.

Inlet: An opening into a storm drain system for the entrance of surface storm water runoff, more completely described as a storm drain inlet.

Lowest Adjacent Grade The elevation of the lowest grade adjacent to a structure, where the soil meets the foundation around the outside of the structure (including

structural members such as basement walkout, patios, decks, porches, support posts or piers, and rim of the window well.

Major Drainage System: Drainage system carrying runoff from an area of one or more square miles.

Minor Drainage System: Drainage system carrying runoff from an area of less than one square mile.

Peak Discharge: The maximum instantaneous flow from a given storm condition at a specific location.

Rainfall Intensity: The rate at which rain is falling at any given instant, usually expressed in inches per hour.

Regulated Drain: A drain subject to the provisions of the Indiana Drainage Code, I.C.-36-9-27

Runoff: That portion of precipitation that flows from a drainage area on the land surface, in open channels, or in stormwater conveyance systems.

Storm Frequency: The time interval between major storms of predetermined intensity and volumes of runoff (e.g. a 5-yr., 10-yr., or 20-yr. storm).

Storm Sewer: A closed conduit for conveying collected storm water, while excluding sewage and industrial wastes. Also called a storm drain.

Stormwater Drainage System All means, natural or man-made, used for conducting storm water to, through or from a drainage area to any of the following: conduits and appurtenant features, canals, channels, ditches, storage facilities, swales, streams, culverts, streets and pumping stations.

Stormwater Facility	All ditches, channels, conduits, levees, ponds, natural and manmade impoundments, wetlands, tiles, swales, sewers and other natural or artificial means of draining surface and subsurface water from land.
Swale:	An elongated depression in the land surface that is at least seasonally wet, is usually heavily vegetated, and is normally without flowing water. Swales conduct stormwater into primary drainage channels and may provide some groundwater recharge.
Storage:	Any structural BMP intended to store or detain stormwater and slowly release it to receiving waters or drainage systems. The term includes detention and retention basins.
Tailwater:	The water surface elevation at the downstream side of a hydraulic structure (i.e. culvert, bridge, weir, dam, etc.).
Time of Concentration:	The travel time of a particle of water from the most hydraulically remote point in the contributing area to the point under study. This can be considered the sum of an overland flow time and times of travel in street gutters, storm sewers, drainage channels, and all other drainage ways. .
Watercourse:	Any river, stream, creek, brook, branch, natural or man-made drainageway in or into which stormwater runoff or floodwaters flow either continuously or intermittently.
Watershed:	The region drained by or contributing water to a specific point that could be along a stream, lake or other stormwater facilities. Watersheds are often broken down into subareas for the purpose of hydrologic modeling.
Wet-bottom Detention Basin:	Also referred to as a “Retention Basin”, is a basin designed to retain a permanent pool of water after having provided its planned detention of runoff during a storm event.

To provide consistency within this chapter the following symbols will be used. These symbols were selected because of their wide use in hydrologic and hydraulic publications. In some cases the same symbol is used in existing publications for more than one definition. Where this occurs in this chapter, the symbol will be defined where it occurs in the text or equations.

TABLE 301:1: Symbols and Definitions

Symbols	Definition	Units
A	Drainage area	acres
C	Runoff Coefficient	-
CN	NRCS-runoff curve number	-
D	Duration	hours
I	Rainfall intensity	in/hr
N	Manning roughness coefficient	-
Q	Rate of runoff	cfs
q_p	Peak rate of discharge	cfs
tc or Tc	Time of concentration	min
V	Velocity	ft/s

SECTION 302 STORMWATER DETENTION DESIGN FOR PEAK FLOW CONTROL

The following shall govern the design of any improvement with respect to the detention of stormwater runoff for peak flow control. Basins shall be constructed to temporarily detain the stormwater runoff that exceeds the maximum peak release rate authorized by these Technical Standards. The required volume of storage provided in these basins, together with such storage as may be authorized in other on-site facilities, shall be sufficient to control excess runoff from the 10-year or 100-year storm as explained below in Sections 302.02 and 302.03. Also, basins shall be constructed to provide adequate capacity to allow for sediment accumulation resulting from development and to permit the pond to function for reasonable periods between cleanings.

In addition to the requirement for peak flow control through detention, the Stormwater Management Ordinance and Technical Standards require the developer to address Channel Protection and Water Quality Control requirements discussed in Chapter 700. The proper way to accommodate the water quality, channel protection, and peak flow rate control of a site is to first consider addressing the water quality and channel protection volume requirements through conventional or LID approaches (as described in Chapter 700) and then add in the required detention storage for peak flow rate control to the overall site design. Meeting the channel protection/water quality volume requirements, either using Conventional or LID Approaches, often include providing extended detention storage features that are usually combined with the detention storage needed for peak runoff rate control of the site into one facility. The following is the required calculation sequence for designing a detention pond with a combined extended detention and peak flow control detention functions. These steps should be followed carefully to avoid potential for future rework.

1. Calculate the required extended detention storage volume as needed to address the Channel Protection Volume (CPv) through the methodology provided in Chapter 700 (depending on the approach utilized, there may be no need for providing an extended detention storage).

2. Determine the control elevation/invert for the drain serving the proposed extended detention storage (ensuring a positive drain to the site outlet). This will be the elevation of the bottom of the proposed extended detention storage and top of the permanent pool if a wet bottom pond is being provided for.

3. Design a storage space to accommodate the extended detention storage volume determined in Step 1, assuming 0.0 cfs going through the drain that will serve this extended detention storage volume. The top of this storage space will be the bottom of the peak flow rate control detention storage and the invert of the main outlet of this peak flow rate control detention storage.

4. Design the main outlet of the peak flow rate control detention storage, sized to carry the allowable 10-year and 100-year release rates, with its control elevation/invert at the top of the extended detention storage space. For above ground facilities, if an outlet control structure includes an orifice to restrict the flow rate for peak flow rate control, such orifice shall be no less than 6 inches in diameter, even if the 6 inch diameter orifice results in a discharge that exceeds the predetermined maximum authorized peak flow release rates. For storage space calculation purposes, use the actual orifice size calculated to accommodate the release rates regardless of whether the orifice size is smaller or larger than the minimum orifice size stated above.

5. Design the peak flow rate control detention storage space by routing the 10-year and 100-year inflow hydrographs through the pond, assuming the pond is empty to the control elevation of the extended detention storage drain as determined in Step 2, but still assuming 0.0 cfs can get out of the extended detention storage drain as the pond fills up. (This assumption recognizes the likelihood of clogging of this typically small extended detention storage drain orifice during the early part of storm). The resulting maximum water surface elevation is the 100-year pool elevation, where the invert of the emergency overflow weir (sized for 1.25 times the peak inflow rate) is located. The pond size and control elevation/invert elevations are final at this stage.

6. Determine the size of the extended detention storage drain and design the drain system in a manner to meet the extended detention minimum and maximum emptying time requirements discussed in Chapter 700. Due to typically required clog-free design and maintenance of the extended detention storage drain structures, the minimum orifice size requirements may be as low as 4 inches. A smaller orifice size may be allowed on a case by case basis when accompanied with special clog-free design and adequate trash rack entrance.

7. To make sure that the addition of the release through the drain will not cause the allowable release rate to be exceeded, reroute the 10-year and 100-year inflow hydrographs through the pond, this time allowing water to also leave through the extended detention storage drain as the pond fills up. If the total peak outflow discharge exceeds the allowable release rate, reduce the size of the main outlet orifice accordingly (but do not go back to redesign the storage space).

8. If the calculated orifice size of the main peak flow rate control storage outlet is less than the minimum orifice size allowed in these Technical Standards, designate the minimum orifice size on the construction plans, but do not go back and recalculate/redesign the storage spaces.

302.01
Acceptable
Detention Facilities

The increased stormwater runoff resulting from a proposed development should be detained on-site by the provisions of appropriate wet bottom or dry bottom detention facilities, parking lots, or other acceptable techniques. Measures that retard the rate of overland flow and the velocity in runoff channels shall also be used to partially control runoff rates.

302.02
Allowable Release
Rates

General Release Rates

Control devices shall limit the discharge to a rate such that the post-developed release rate from the site is no greater than 0.1 cfs per acre of development for 0-10 year return interval storms and 0.3 cfs per acre of developed area for 11 - 100 year return interval storms. The above fixed general release rates may be set at a lower value by the Big Cicero Creek Joint Drainage Board and/or the Big Cicero Creek Joint Drainage Board for certain watersheds if more detailed data becomes available as a result of comprehensive watershed studies conducted and/or formally approved and adopted by the Big Cicero Creek Joint Drainage Board. The applicant shall confirm the applicable release rates with

the Big Cicero Creek Joint Drainage Board and the Big Cicero Creek Joint Drainage Board prior to initiating the design calculations to determine whether a basin-specific rate has been established for the watershed.

For sites where the pre-developed area has more than one (1) outlet, the release rate should be computed based on pre-developed discharge to each outlet point. The computed release rate for each outlet point shall not be exceeded at the respective outlet point even if the post developed conditions would involve a different arrangement of outlet points.

Site-Specific Release Rates for Sites with Depressional Storage

For sites where depressional storage exists, the general release rates provided above may have to be further reduced. If depressional storage exists at the site, site-specific release rates must be calculated according to methodology described in Chapter 200, accounting for the depressional storage by modeling it as a pond whose outlet is a weir at an elevation that stormwater can currently overflow the depressional storage area. Post developed release rate for sites with depressional storage shall be the 2-year pre-developed peak runoff rate for the post-developed 10-year storm and 10-year pre-developed peak runoff rate for the post-developed 100-year storm. In no case shall the calculated site-specific release rates be larger than general release rates provided above.

Note that by definition, the depressional storage does not have a direct gravity outlet but if in agricultural production, it is more than likely drained by a tile and should be modeled as "empty" at the beginning of a storm. The function of any existing depressional storage should be modeled using an event hydrograph model to determine the volume of storage that exists and its effect on the existing site release rate. To prepare such a model, certain information must be obtained, including delineating the tributary drainage area, the stage-storage relationship and discharge-rating curve, and identifying the capacity and elevation of the outlet(s).

The tributary area should be delineated on the best available topographic data. After determining the tributary area, a hydrologic analysis of the watershed should be performed, including, but not limited to, a calculation of the appropriate composite runoff curve number and time of concentration. Stage-storage data for the depressional area should be obtained from the site topography. The outlet should be clearly marked and any calculations performed to create a stage-discharge rating curve must be included with the stormwater submittal.

Also note that for determining the post-developed peak runoff rates, the depressional storage must be assumed to be filled unless the Big Cicero Creek Joint Drainage Boardthe Big Cicero Creek Joint Drainage Board can be assured, through a dedicated easement, that the noted storage will be preserved in perpetuity.

Downstream Restrictions

In the event the downstream receiving channel or storm sewer system is inadequate to accommodate the post-developed release rate provided above, then the allowable release rate may need to be reduced to that rate permitted by the capacity of the receiving downstream channel or storm sewer system. Additional detention, as determined by the Big Cicero Creek Joint Drainage Boardthe Big Cicero Creek Joint Drainage Board, may be required to store that portion of the runoff exceeding the capacity of the receiving sewers or waterways. When such downstream restrictions are suspected, the Big Cicero Creek Joint Drainage Boardthe Big Cicero Creek Joint Drainage Board may require additional analysis to determine the receiving system's limiting downstream capacity.

If the proposed development makes up only a portion of the undeveloped watershed upstream of the limiting restriction, the allowable release rate for the development shall

be in direct proportion to the ratio of its drainage area to the drainage area of the entire watershed upstream of the restriction.

As an alternative, off-site drainage improvements may be required. Those improvements may include, but are not limited to, extending storm sewers, clearing, dredging, streambank stabilization, and/or removal of obstructions to open drains or natural water courses, and the removal or replacement of undersized culvert pipes as required by the Big Cicero Creek Joint Drainage Boardthe Big Cicero Creek Joint Drainage Board..

Regulated Drain Watershed Considerations
If the project site is within a Regulated Drain Watershed of the County in which the project is located, the applicant will also need to abide by applicable detention requirements of the Big Cicero Creek Joint Drainage Board, whether the site is located in an incorporated area or not.

302.03
Methodology for Determination of Detention Storage Volume

A. Development Sites Less than or Equal to 5 Acres in Size, With a Contributing Drainage Area Less than or Equal to 50 Acres and No Depressional Storage

The required volume of stormwater storage may be calculated using the Rational Method and based on the runoff from a 100-year return period storm. A computer model, such as TR-55 (NRCS), TR-20 (NRCS), HEC-HMS (COE), and HEC-1 (COE), that can generate hydrographs based on the NRCS TR-55 time of concentration and curve number calculation methodologies may also be used along with a 24-hour duration NRCS Type 2 storm. Note that for the purpose of determining the post-developed conditions curve numbers, due to significant disturbance to the upper soil layers during the construction activities, the initially determined hydrologic soil group for disturbed areas should be changed to the next less infiltrating capacity category (i.e., A to B, B to C, and C to D).

> **LID Exception:** If Low Impact Development (LID) approach is pursued in satisfying the requirements noted in Chapter 700 (Post-Construction Stormwater Quality Management), the post-developed CN for the protected undisturbed or restored disturbed areas meeting the requirements described in Chapter 700 and BMP Fact Sheets may be determined based on pre-development underlying soil layer.

The following 9-step procedure, based on the Rational Method, may be used to determine the required volume of storage

Step	Procedure
1.	Determine total drainage area in acres "A".
2.	Determine the parcel area tributary to each outlet and determine the post-development 100-year release runoff rate (Q_u) based on general release rates provided in Chapter 6 of these Technical Standards document.
3	Determine composite runoff coefficient "C_d" based on developed conditions and a 100-year return period.
4.	Determine 100-year return rainfall intensity "I_d" for various storm durations "t_d" up through the 24-hour duration using **Table 2-4**.
5.	Determine developed inflow rates "Q_d" for various storm durations "t_d", measured in hours.

$$Q_d = (C_d)(I_d)(A_d)$$

6. Compute a storage rate "$S(t_d)$" for various storm durations "t_d" up through the 24-hour duration.

$$S(t_d) = (Q_d) - (Q_u)$$

7. Compute required storage volume "S_R" in acre-feet for each storm duration "t_d". This assumes a triangular hydrograph of duration ($2t_d$) hours with a peak flow of $S(t_d)$ at t_d hours.

$$S_R = S(t_d)\left(\frac{t_d}{12}\right)$$

8. Select largest storage volume computed in Step 7 for any storm duration "t_d" for detention basin design.

9. Repeat Steps 2-8 of this process for the post-developed 10-year storm.

B. Development Sites Greater Than 5 Acres in Size or Contributing Drainage Area Greater than 50 Acres or With Significant Depressional Storage

All runoff detention storage calculations for these development sites shall be prepared using a computer model that can generate hydrographs based on the NRCS TR-55 time of concentration and curve number calculation methodologies. Note that for the purpose of determining the post-developed conditions curve numbers, due to significant disturbance to the upper soil layers during the construction activities, the initially determined hydrologic soil group for disturbed areas should be changed to the next less infiltrating capacity category (i.e., A to B, B to C, and C to D).

> **LID Exception:** If Low Impact Development (LID) approach is pursued in satisfying the requirements noted in Chapter 700 (Post-Construction Stormwater Quality Management), the post-developed CN for the protected undisturbed or restored disturbed areas meeting the requirements described in Chapter 700 and BMP Fact Sheets may be determined based on pre-development underlying soil layer.

The 24-hour NRCS Type 2 Rainfall Distribution shall be utilized to determine the required storage volume. The allowable release rates shall be determined based on the methodologies provided in Section 302.02. Examples of computer models that can generate such hydrographs include TR-55 (NRCS), TR-20 (NRCS), HEC-HMS (COE), and HEC-1 (COE). These programs may be downloaded free of charge from the associated agencies' web sites. The computer models ICPR and Pond Pack may also be used. However, the latter computer software are proprietary. If interconnected ponds are utilized, the use of ICPR or Pond Pack may be required to appropriately model the more complex hydrologic and hydraulic relationships associated with such system. Other models may be acceptable and should be accepted by the Big Cicero Creek Joint Drainage Boardthe Big Cicero Creek Joint Drainage Board prior to their utilization.

302.04
Management of Off-Site Runoff

Runoff from all upstream tributary areas (off-site land areas) may be bypassed around the detention/retention facility without attenuation. Such runoff may also be routed through the detention/retention facility, provided that a separate, secondary outlet system is

incorporated for the safe passage of such flows, i.e., not through the primary outlet of a detention facility. Unless the pond is being designed as a regional detention facility and therefore all off-site runoff to the pond retained, the primary outlet structure shall be sized and the invert elevation of the secondary outlet for bypassing off-site runoff determined according to the on-site runoff only. To accomplish this, the 100-year on-site runoff must be determined by temporarily ignoring the off-site runoff and routed through the pond and through the primary outlet pipe. The resulting pond elevation would be the invert elevation of the secondary outlet. Once the size and location of the primary outlet structure and the invert elevation of the secondary outlet for off-site runoff are determined by considering on-site runoff only, the size of the secondary outlet and the 100-year pond elevation is determined by routing the entire inflow, on-site and off-site, through the pond. Once the 100-year pond elevation is determined in this manner, the crest elevation of the open emergency weir noted in 302.10 (below) is set at that elevation. Note that the total peak flow released from the outlet system shall not be larger than the total of the allowable release rate and the off-site flow being bypassed through the pond for the 100-year event.

Note that the efficiency of the detention/retention facility in controlling the on-site runoff may be severely affected if the off-site area is considerably larger than the on-site area. As a general guidance, on-line detention may not be effective in controlling on-site runoff where the ratio of off-site area to on-site area is larger than 5:1. Additional detention (above and beyond that required for on-site area) may be required by the Big Cicero Creek Joint Drainage Boardthe Big Cicero Creek Joint Drainage Board when the ratio of off-site area to on-site area is larger than 5:1.

302.05
General Detention Basin Design Requirements

1. The detention facility shall be designed in such a manner that a minimum of 90% of the maximum volume of water stored and subsequently released at the design release rate shall not result in a storage duration in excess of 48 hours from the start of the storm unless additional storms occur within the period. In other words, the design shall ensure that a minimum 90% of the original detention capacity is restored within 48 hours from the start of the design 100-year storm (i.e., within 36 hours after pond reaches its full position).

2. The 100-year elevation of stormwater detention facilities shall be separated by not less than 25 feet from any building or structure to be occupied. The Lowest Adjacent Grade (including walkout basement floor elevation) for all residential, commercial, or industrial buildings shall be set a minimum of 2 feet above the 100-year pond elevation or 2 feet above the emergency overflow weir elevation, whichever is higher. In addition to the Lowest Adjacent Grade requirements, any basement floor must be at least a foot above the normal water level of any wet-bottom pond. Special considerations, based on detailed geotechnical analysis, should be made prior to considering placement of any basement below the 100-year flood elevation of an adjacent flooding source or pond.

3. No detention facility or other water storage area, permanent or temporary, shall be constructed under or within twenty (20) feet of any pole or high voltage electric line. Likewise, poles or high voltage electric lines shall not be placed within twenty (20) feet of any detention facility or other water storage area.

4. All stormwater detention facilities shall be separated from any road right-of-way (using the most restrictive right-of-way possible) by minimum of 50 feet, measured from the top of bank or the 100-year pool if no defined top of bank is present. Use of guard rails, berms, or other structural measures are encouraged

and may be considered in lieu of the above-noted setbacks to minimize the chances of vehicles sliding into the pond.

5. Slopes no steeper than 3 horizontal to 1 vertical (3:1) for safety, erosion control, stability, and ease of maintenance shall be permitted.

6. Debris Guard designed in accordance with requirements of the Big Cicero Creek Joint Drainage Boardthe Big Cicero Creek Joint Drainage Board shall be provided for any pipe or opening.

7. Outlet control structures shall be designed to operate as simply as possible and shall require little or no maintenance and/or attention for proper operation. For maintenance purposes, the outlet shall be a minimum of 0.5 foot above the normal water level of the receiving water body. They shall limit discharges into existing or planned downstream channels or conduits so as not to exceed the predetermined maximum authorized peak flow rate. If an outlet control structure includes an orifice to restrict the flow rate, such orifice shall be no less than 6 inches in diameter, even if the 6-inch diameter orifice results in a discharge that exceeds the predetermined maximum authorized peak flow release rates as determined using methodologies in Section 302.02.

8. Grass or other suitable vegetative cover shall be provided along the banks of the detention storage basin. Vegetative cover around detention facilities should be maintained as provided by restrictive covenants, policy or codes. Potential infiltration of accumulated water into the ground shall not be taken into account as part of the calculations for sizing the basin's outlet structure.

9. Debris and trash removal and other necessary maintenance shall be performed as provided by restrictive covenants, policy or codes.

10. No residential lots, or any part thereof, shall be used for any part of a detention basin, assumed full to the 100-year water surface elevation or the emergency overflow weir elevation, whichever is higher. Detention basins, assumed full to the 100-year water surface elevation or the emergency overflow weir elevation, whichever is higher, shall be placed within a common area either platted or legally described and recorded as a perpetual stormwater easement. A minimum of fifteen (15) feet horizontally from the top of bank of the facility, or the 100-year pool if no defined top of bank is present, shall be dedicated as permanent stormwater easement if the above-noted boundary of the common area does not extend that far.

11. Detention basins shall be designed with an additional ten (10) percent of available capacity to allow for sediment accumulation resulting from development and to permit the pond to function for reasonable periods between cleanings. Basins should be designed to collect sediment and debris in specific locations, such as a forebay, so that removal costs are kept to a minimum. For wet-bottom ponds, the sediment allowance may be provided below the permanent pool elevation. No construction trash or debris shall be allowed to be placed within the permanent pool. If the pond is used as a sediment control measure during active construction, the performance sureties will not be released until sediment has been cleaned out of the pond and elevations and grades have been reestablished as noted in the accepted plans.

302.06
Additional Requirements for Wet-Bottom Facility Design

Where part of a detention facility will contain a permanent pool of water, all the items required for detention storage shall apply. Also, a controlled positive outlet will be required to maintain the design water level in the wet bottom facility and provide required detention storage above the design water level. However, the following additional conditions shall apply:

1. Facilities designed with permanent pools or containing permanent lakes shall have a water area of at least one-half (0.5) acre with a minimum depth of eight (8) feet. If fish are to be used to keep the pond clean, a minimum depth of approximately ten (10) feet shall be maintained over at least 25 percent of the pond area. The remaining pond area shall have no extensive shallow areas, except as required to install the safety ramp, safety ledge, and stormwater BMPs as required below. Construction trash or debris shall not be placed within the permanent pool. The pond design shall be according to requirements of the Big Cicero Creek Joint Drainage Boardthe Big Cicero Creek Joint Drainage Board.

2. A safety ramp exit from the lake may be required in some cases and shall have a minimum width of twenty (20) feet and exit slope of 6 horizontal to 1 vertical (6:1). The safety ramp shall be constructed of suitable material to prevent structural instability due to vehicles or wave action.

3. Periodic maintenance is required in lakes to control weed and larval growth. The facility shall also be designed to provide for the easy removal of sediment that will accumulate during periods of reservoir operation. Maintenance shall be provided by restrictive covenants, policy or codes.

4. Methods to prevent pond stagnation, including but not limited to aeration facilities, should be considered on all wet-bottom ponds. Design calculations to substantiate the effectiveness of proposed aeration facilities, and any impacts on the effectiveness of the pond's use as a stormwater BMP shall be submitted with final engineering plans. Agreements for the perpetual operation and maintenance of aeration facilities shall be included in the restrictive covenants of the development or as provided by policy or codes.

302.07
Additional Requirements for Dry-Bottom Facility Design

In addition to general design requirements, detention facilities that will not contain a permanent pool of water shall comply with the following requirements:

1. Provisions shall be incorporated into facilities for complete interior drainage of dry bottom facilities, including a minimum 1% bottom slope in all directions if tile underdrains are provided and a minimum of 2% if no underdrains are provided.. A positive/gravity outlet is required for the underdrains in all dry-bottom detention facilities.

2. For residential developments, the maximum planned depth of stormwater stored shall not exceed four (4) feet.

3. In excavated detention facilities, a minimum side slope of 3:1 shall be provided for stability.

302.08
Parking Lot Storage

Paved parking lots may be designed to provide temporary detention storage of stormwater on all or a portion of their surfaces. Depths of storage shall be limited to a maximum depth of six (6) inches. Ponding should in general, be confined to those positions of the parking lots farthest from the area served. Before such detention method is allowed, a perpetual maintenance agreement must be executed by the owner or the developer and filed with the Big Cicero Creek Joint Drainage Boardthe Big Cicero Creek Joint Drainage Board. In addition, the 100-year inundation boundary should be determined and clearly shown on the construction plans.

302.09
Detention Facilities in Floodplains

Except for projects exempted under Chapter 100, Section 105-01, no detention facilities are allowed to be placed within floodplains of any regulated drain or watercourse that has more than 25 acres of contributing drainage area, whether designated as such on FEMA maps or not.

302.10
Design of Detention Facility Emergency Spillways

Emergency overflow facilities such as a weir or spillway shall be provided for the release of exceptional storm runoff. The overflow facility shall be of such design that its operation is automatic and does not require manual attention.

Emergency overflow facilities shall be designed to convey, without overtopping the detention facility banks, one and one-quarter (1.25) times the peak discharge resulting from the 100-year design storm event runoff from the entire contributing watershed draining to the detention/retention facility , assuming post-development condition on-site and existing condition off-site. The length of the weir is to be determined using the weir equation, with the overflow weir control elevation at the Pond's 100-year elevation (pond is assumed full to the overflow weir control elevation), discharge equal to 1.25 times the peak 100-year inflow, and the maximum head being the difference between the weir control elevation and the top of the bank.

The emergency overflow routing from the emergency overflow facility to an adequate receiving system, as determined by the Big Cicero Creek Joint Drainage Board, must be positive (by gravity) and the spillway must be set at the highest elevation in the emergency flow routing. The emergency overflow routing and spillway, with a spot elevation labeled, must be shown on the construction plans and on the secondary plat. It must be sized to accommodate the design flow of the pond's emergency overflow weir. Thirty (30) feet along the centerline of this emergency overflow route shall be designated as permanent drainage easement. No fences or landscaping can be constructed within the easement areas. The Lowest Adjacent Grade of all residential, commercial, or industrial buildings along this emergency overflow route shall be set a minimum of 2 feet above the flood elevation along the route, calculated based on the pond's emergency overflow weir design discharge.

302.11
Acceptable Outlet

Design and construction of the stormwater facility shall provide for the discharge of the stormwater runoff from off-site land areas as well as the stormwater from the area being developed (on-site land areas) to an acceptable outlet(s) (as determined by the Big Cicero

Creek Joint Drainage Board) having capacity to receive upstream (off-site) and on-site drainage.

Outlets into regulated drains or natural watercourses shall provide a positive unobstructed or unrestrictive conveyance into said system. The following provisions shall be followed:

1. All conveyances shall terminate into an approved adequate outlet.

2. All outlets, either open drain or storm sewer, shall extend to the regulated drain or natural watercourse.

3. All storm sewer shall extend to either a receiving storm sewer system or an open regulated drain or natural surface watercourse as approved by the Big Cicero Creek Joint Drainage Board.

4. Storm sewers shall not outlet into rear yard swales

5. Outlets shall not directly discharge onto the ground surface as surface flow.

6. Underwater discharges shall not be allowed. All discharges into a watercourse, pond, or lake shall have the invert at or above the normal pool elevation or normal flow elevation for the receiving stream.

The flow path from the development outfall(s) to a regulated drain or natural watercourse (as determined by the Big Cicero Creek Joint Drainage Board) shall be provided on an exhibit that includes topographic information. Any existing field tile encountered during the construction shall also be incorporated into the proposed stormwater drainage system or tied to an acceptable outlet. In addition, no activities conducted as part of the development shall be allowed to obstruct the free flow of flood waters from an upstream property.

Where the outfall from the stormwater drainage system of any development flows through real estate owned by others prior to reaching a regulated drain or watercourse, no acceptance shall be granted for such drainage system until all owners of real estate and/or tenants crossed by the outfall consent in writing to the use of their real estate through a recorded easement or are notified of such proposal and their rights to appeal any approval of the design. Proof of this notification must be submitted to the jurisdiction entity..

If an adequate outlet is not located on site, then further reduction in allowable release rates or off-site drainage improvements may be required. Those improvements may include, but are not limited to, extending storm sewers, clearing, dredging and/or removal of obstructions to open drains or natural water courses, and the removal or replacement of undersized culvert pipes as required by the Big Cicero Creek Joint Drainage Board.

<u>Regulated Drain Considerations</u>
If the project site's outlet directly discharges to a Regulated Drain, the applicant will also need to abide by the applicable requirements of the Big Cicero Creek Joint Drainage Board in, whether the site is located in an incorporated area or not.

SECTION 303 OPEN CHANNEL DESIGN

303.01
Introduction

Open channel flow may be evaluated utilizing Manning's equation, however, restrictions within open channels, such as at open culverts or storm drains, may be required to be evaluated by more sophisticated design methods such as those listed in Section 303.03.

303.02
Mannings Equation

The waterway area for channels shall be determined using Manning's Equation, where:

$$A = Q/V$$

A = Waterway area of channel in square feet

Q = Discharge in cubic feet per second (cfs)

V = Steady-State channel velocity, as defined by Manning's Equation (See Section 305.02)

303.03
Backwater Method for Drainage System Analysis

The determination of 100-year water surface elevation along channels and swales shall be based on accepted methodology and computer programs designed for this purpose. Computer programs HEC-RAS, HEC-2, and ICPR are preferred programs for conducting such backwater analysis. The use of other computer models must be accepted in advance by the Big Cicero Creek Joint Drainage Board..

303.04
Appurtenant Structures

The design of channels will include provisions for operation and maintenance and the proper functioning of all channels, laterals, travelways, and structures associated with the project. Recessed inlets and structures needed for entry of surface and subsurface flow into channels without significant erosion or degradation shall be included in the design of channel improvements. The design will also provide for necessary floodgates, water level control devices, and any other appurtenance structure affecting the functioning of the channels and the attainment of the purpose for which they are built.

The effects of channel improvements on existing culverts, bridges, buried cables, pipelines, and inlet structures for surface and subsurface drainage on the channel being improved and laterals thereto shall be evaluated to determine the need for modification or replacement. Culverts and bridges which are modified or added as part of channel improvement projects shall meet reasonable standards for the type of structure, and shall have a minimum capacity equal to the design discharge or governmental agency design requirements, whichever is greater.

303.05
Grading and Depth of Open Channels

1. The required channel cross-section and grade are determined by the design capacity, the material in which the channel is to be constructed, and the

requirements for maintenance. A minimum depth may be required to provide adequate outlets for subsurface drains, tributary ditches, or streams. The channel grade shall be such that the velocity in the channel is high enough to prevent siltation but low enough to prevent erosion. Velocities less than 2 feet per second are not acceptable, as siltation will take place and ultimately reduce the channel cross-section area. The maximum permissible velocities in vegetated-lined channels are shown in Table 303.01. In addition to existing runoff, the channel design should incorporate increased runoff due to the proposed development.

2. Where depth of design flow is slightly below critical depth, channels shall have freeboard adequate to cope with the effect of hydraulic jumps.

3. Along the streets and roads, the bottom of the ditch should be low enough to install adequately-sized driveway culverts without creating "speed bumps". The driveway culvert inverts shall be designed to adequately consider upstream and downstream culvert elevations.

4. Flow of a channel into a closed system is prohibited, unless runoff rate and head loss computations demonstrate the closed conduit to be capable of carrying the 100-year channel flow for developed conditions, either entirely or in combination with a defined overflow channel, with no reduction of velocity.

5. When the design discharge produces a depth of greater than three (3) feet in the channel, appropriate safety precautions shall be added to the design criteria based on reasonably anticipated safety needs.

6. Swale side slopes shall be no steeper than 3 horizontal to 1 vertical (3:1). Flatter slopes may be required to prevent erosion and for ease of maintenance. The swale design shall be according to the requirements of the Big Cicero Creek Joint Drainage Board.

7. Minimum swale slopes are 1.0%, unless designed to act as a stormwater quality BMP. All flow shall be confined to the specific easements associated with each rear and side lot swale that are part of the minor drainage system. Unless designed to act as a stormwater quality BMP, vegetated swales shall have tile underdrains to dry the swales. (See requirements of the Big Cicero Creek Joint Drainage Board.) Tile lines may be outletted through a drop structure at the ends of the swale or through a standard tile outlet. Further guidance regarding this subject may be found in the latest edition of the Indiana Drainage Handbook.

8. Residential rear and side lot swales shall not exceed 300 feet in length to any inlet and shall not convey flow from more than 3 lots.

303.06
Channel Stability

Characteristics of a stable channel are:

a] It neither promotes sedimentation nor degrades the channel bottom and sides.

b] The channel banks do not erode to the extent that the channel cross-section is changed appreciably.

c] Excessive sediment bars do not develop.

d] Excessive erosion does not occur around culverts, bridges, outfalls or elsewhere.

e] Gullies do not form or enlarge due to the entry of uncontrolled flow to the channel.

Channel stability shall be determined for an aged condition and the velocity shall be based on the design flow or the bankfull flow, whichever is greater, using an "n" value for various channel linings as shown in Table 303.02. In no case is it necessary to check channel stability for discharges greater than that from a 100-year frequency storm.

Channel stability shall be checked for conditions representing the period immediately after construction. For this stability analysis, the velocity shall be calculated for the expected flow from a 10-year frequency storm on the watershed, or the bankfull flow, whichever is smaller, and the "n" value for the newly constructed channels in fine-grained soils and sands may be determined in accordance with the "National Engineering Handbook 5, Supplement B, Soil Conservation Service" (currently NRCS) and shall not exceed 0.025. This reference may be obtained by contacting the National Technical Information Service in Springfield, Illinois. The allowable velocity in the newly constructed channel may be increased by a maximum of 20 percent to reflect the effects of vegetation to be established under the following conditions:

a] The soil and site in which the channel is to be constructed are suitable for rapid establishment and support of erosion controlling vegetation.

b] Species of erosion controlling vegetation adapted to the area, and proven methods of establishment are shown.

c] The channel design includes detailed plans for establishment of vegetation on the channel side slopes.

Materials acceptable for use as channel lining are:

1. Grass (hand sown or hydroseed)
2. Revetment Riprap
3. Concrete
4. Hand Laid Riprap
5. Precast Cement Concrete Riprap
6. Gabions (or reno mattresses)
7. Coconut Mattings or erosion control blanket - only until grass is established

Use of bio-engineered (green solution) methods for lining materials is recommended and may be explored, as applicable. Other lining materials must be accepted in writing by the Big Cicero Creek Joint Drainage Board. Materials shall comply with the latest edition of the INDOT, "Standard Specifications".

303.07
Drainage System
Overflow Design

Ponding and overflow path throughout the development resulting from a 100-year storm event or from a flood route of an internal detention pond or off-site development or watershed, calculated based on all contributing drainage areas, on-site and off-site, in their proposed or reasonably anticipated land use and with the storm pipe system assumed completely plugged, shall be determined, clearly shown as hatched area on the plans, and a minimum width of 30 feet along the centerline of the overflow path contained in permanent drainage easements. A continuous flood route from the sag inlets to the final outfall shall be shown and the minimum 30-feet along the centerline contained within an easement or road right-of-way regardless of the 100-year storm event

ponding elevation. A statement shall be added to the secondary plat that would refer the viewer to the construction plans to see the entire extent of overflow path as hatched areas. No fences or landscaping or any other above grade improvements can be constructed within the easement areas that may impede the free flow of stormwater. These areas shall be designated as flood routes and contained in common areas that are to be maintained in accordance with restrictive covenants, codes or policies. The Lowest Adjacent Grade for all residential, commercial, or industrial buildings shall be set a minimum of 1 foot (rather than normal 2 feet, as the storm drains are assumed plugged as an additional safety factor) above the highest noted overflow path/ponding elevation across the property frontage.

All buildings shall have a minimum flood protection grade shown on the secondary plat. Minimum Flood Protection Grade of all structures fronting a pond or open ditch shall be no less than 2 feet (1 foot for the 100-year ponding/overflow paths as the storm drains are assumed plugged as an additional safety factor) above any adjacent 100-year local or regional flood elevations, whichever is greater, for all windows, doors, attached garage entrances, pipe entrances, window wells, and any other structure member where floodwaters can enter a building.

The overflow path/ponding may be modeled as successive series of natural ponds and open channel segments. Consideration shall be given to the highest ground elevations along the overflow path. Ponds should be modeled similar to that discussed for modeling depressional areas in Section 302.02. Channels should be modeled according to modeling techniques discussed earlier in this Chapter. The calculations for determining the 100-year overflow path/ponding elevations may be based on hand calculation methods utilizing normal depth calculations and storage routing techniques or performed by computer models. Examples of computer models that either individually or in combination with other models can handle the required computations include TR-20, HEC-HMS, and HEC-1, combined with HEC-RAS. Other models may be acceptable and should be accepted by the Big Cicero Creek Joint Drainage Board prior to their utilization.

Values in Table 303.03 may be utilized as an alternative to the above-noted detailed calculations for determining the required pad elevations of buildings near an overflow path.

If Table 303.03 is used, the Big Cicero Creek Joint Drainage Board reserves the right to require independent calculations to verify that the proposed building pads/building lags provide adequate freeboard above the anticipated overflow path/ponding elevations.

The LAG requirements for buildings adjacent to other flooding sources are discussed in Section 105.02 of this Manual. In case there are more than one flooding sources applicable to a building site, the highest calculated LAG for the building shall govern the placement of the building on that site

In the case of existing upstream detention, an allowance equivalent to the reduction in flow rate provided may be made for upstream detention only when: (1) such detention and release rate have previously been accepted by an official from the Big Cicero Creek Joint Drainage Board charged with the approval authority at the time of the acceptance, and (2) evidence of its construction and maintenance can be shown.

SECTION 304 CULVERTS/BRIDGES

304.01
Introduction

The design methods and criteria outlined or referred to within this section shall be used in the design and evaluation of culvert systems within the jurisdiction of this Manual. Computer models such as Federal Highway Administration's HY-8 may be used to perform culvert/bridge design computations.

Culverts/bridges under roadways, involving backwater and/or road overflow during the 100-year design storm, shall be analyzed utilizing the methodologies set forth in Section 303.03 of this manual for determination of the depth of flow over the culvert/roadway during the peak discharge from the 100-year design storm event, backwater elevations, downstream flow velocities and resulting channel scour impacts.

In addition to satisfying any applicable state agencies' requirements, calculations should be provided showing the impacts of the proposed new or modified culvert/bridge (involving a raise of overflow elevation) for the 2- through 500-year flood events on upstream elevations and downstream discharges. The design should also ensure that the minimum overflow section elevation (typically located on top of the bridge/culvert or on the approach road to accommodate passage of flood flows larger than the design flood) is not higher than the lowest adjacent grades of buildings located along the stream upstream of the crossing. The requirements of this paragraph also appliy to other structures placed within the stream channels, such as fords, low-head dams, weirs, etc.

Additional design requirements for bridges and culvers are contained within Section 201.03 of this Manual.

SECTION 305 STORM DRAINS/INLETS

305.01
Introduction

All storm sewers, whether private or public, and whether constructed on private or public property shall conform to the design standards and other requirements contained herein.

305.02
Storm Drain Pipe Design

Determination of hydraulic capacity for storm sewers sized by the Rational Method analysis must be done using Manning's Equation. where:

$$V = (1.486/n)(R^{2/3})(S^{1/2})$$

Then:

$$Q=(V)(A)$$

Where:

Q = capacity in cubic feet per second

V = mean velocity of flow in feet per second

A = cross sectional area in square feet

R = hydraulic radius in feet

S = slope of the energy grade line in feet per foot

n = Manning's "n" or roughness coefficient

The hydraulic radius, R, is defined as the cross sectional area of flow divided by the wetted flow surface or wetted perimeter. Allowable "n" values and maximum permissible velocities for storm sewer materials are listed in **Table 303.02**.

305.03
Backwater Method for Pipe System Analysis

Various computer modeling programs such as HYDRA, ILLUDRAIN, and STORMCAD are available for analysis of storm drains. Computer models to be utilized, other than those listed, must be accepted by the Big Cicero Creek Joint Drainage Board.. The use of submerged storm sewer outfalls is prohibited.

305.04
Minimum Velocity

Minimum and maximum allowable slopes shall be those capable of producing velocities of between 2.5 and 10 feet per second, respectively, when the sewer is flowing full. Maximum permissible velocities for various storm sewer materials are listed in **Table 305.01**.

305.05
Inlet Sizing and Spacing

Inlets or drainage structures shall be utilized to collect surface water through grated openings and convey it to storm sewers, channels, or culverts. The inlet grate opening provided shall be adequate to pass the design 10-year flow with 50% of the sag inlet areas clogged. An overload channel from sag inlets to the overflow channel or basin shall be provided at sag inlets. Inlet design and spacing may be done using the hydraulic equations by manufacturers or orifice/weir equations. Use of the U.S. Army Corps of Engineers HEC-12 computer program is also an acceptable method. Gutter spread on continuous grades may be determined using the Manning's equation, or by using **Figure 305.01**.

The maximum inlet spacing shall be 400 feet.

Further guidance regarding gutter spread calculation may be found in the latest edition of HERPICC Stormwater Drainage Manual, available from the Local Technical Assistance Program (LTAP). At the time of printing of this document, contact information for LTAP was:

Indiana LTAP
Purdue University
Toll-Free: (800) 428-7369 (Indiana only)
Phone: (765) 494-2164
Fax: (765) 496-1176
Email: inltap@ecn.purdue.edu
Website: www.purdue.edu/INLTAP/

305.06
Regulated Drain Pipe Size and Material Requirements

For storm sewer or subsurface drains that will become regulated drains, the following requirements shall be followed:

1. Storm sewers shall be reinforced concrete pipe with a minimum diameter of 12 inches.

2. Subsurface drains (SSD) shall be a minimum of 6 inches in depth and shall be Schedule 35 PVC or Double Wall perforated or non-perforated plastic pipe.

SECTION 306 EASEMENTS

306.01
Introduction

Guidelines for minimum easement widths are provided below. More stringent requirements for stormwater easement size and additional covenants may be made by the Big Cicero Creek Joint Drainage Board based upon individual size conditions.

Detention/retention basins shall be constructed within a common area either platted or legally described and recorded as a perpetual stormwater easement. A minimum of fifteen (15) feet horizontally from the top of bank of the facility shall be dedicated as permanent stormwater easement if the boundary of the above-noted common area does not extend that far.

Public street rights-of-ways will not be acceptable areas for construction of detention/retention facilities.

No drainage easement or a combination drainage and utility easement shall be located within a tree preservation easement.

306.02
Easement Requirements

There shall be no trees or shrubs planted, nor any structures or fences erected, in any drainage easement, unless otherwise accepted by the Big Cicero Creek Joint Drainage Board.

A. All new channels, drain tiles equal to or greater than 12 inches in diameter, inlet and outlet structures of detention and retention ponds, and appurtenances thereto as required by this Article, that are installed in subdivisions requiring a stormwater management permit from the Big Cicero Creek Joint Drainage Board shall be contained within a minimum 30 feet of drainage easement (15 feet from centerline on each side) and shown on the recorded plat. New drain tiles refer to all sub-surface stormwater piping, tubing, tiles, manholes, inlets, catch basins, risers, etc.

B. A minimum of 25 feet from top of the bank on each side of a new channel shall be designated on the recorded plat as a Drainage Easement. If the top of bank is not vegetated according the development's landscape plan, a minimum 25-foot width of filter strip shall be installed within the drainage easement.

C. Rear-yard swales and emergency overflow paths associated with detention ponds shall be contained within a minimum of 30 feet width (15 feet from centerline on each side) of drainage easement.

D. A minimum of 15 feet beyond the actual footprint (top of the bank or the 100-year pond elevation if no top of bank is present) of stormwater detention facilities shall be designated as drainage easement. A minimum 20-foot width easement shall also be required as access easement from a public right-of-way to the facility, unless the pond is immediately next to a public right-of-way

E. The statutory 75-foot (each side) drainage easement for regulated drains already within the Hamilton County system may be reduced if the drain is re-classified by the County Surveyor as an Urban Drain.

F. An annual maintenance assessment shall be set up on each new regulated drain established in a new subdivision. The amount of the assessment will be determined by the Drainage Board and/or Surveyor's Office of the County in which the project is located and so certified.

G. Any outlet to, crossing, and/or encroachment of a Regulated Drainage Easement requires application and acceptance from the Big Cicero Creek Joint Drainage Board.

SECTION 307 WATERCOURSE IMPROVEMENTS

307.01 Watercourse Improvement

Whenever a residential subdivision or commercial development constructs improvements upon lands, which is traversed by a watercourse, the landowner/developer shall make improvements to said watercourse. These improvements shall consist of the following:

1. All debris and obstructions within the channel (bank to bank) shall be removed. This shall include but not be limited to logjams and trash.
2. Clear all trees which are dead and leaning at a 45 degree or greater angle or trees with roots that are exposed in the channel and potentially will fall into the stream. In clearing, the tree shall be cut flush with the ground and treated with an EPA-approved brush killer.
3. All stream bank erosion shall be repaired in an acceptable manner approved by the Big Cicero Creek Joint Drainage Board.
4. The above required improvements must be reflected on the overall design plans for the development and submitted to the Big Cicero Creek Joint Drainage Board for prior approval.
5. All open regulated Drains shall have an onsite inspection prior to construction plans having been developed. Onsite inspection shall be with the plan reviewer and inspector of the Big Cicero Creek Joint Drainage Board and the developer/developer's engineer.

307.01 Watercourse Maintenance

Entities owning property through which a watercourse passes, or such an Entity's lessee, shall keep and maintain that part of the watercourse in accordance with any applicable codes of the County in which the project is located in. In addition, the Entity or lessee shall maintain existing privately owned structures within or adjacent to a watercourse, so that such structures will not become a hazard to the use, function, or physical integrity of the watercourse. The Entity or lessee shall not place or construct a privately owned structure(s) or other impairment within or adjacent to the watercourse such that is an

impairment or a detriment or in such a location that is in violation of applicable codes of the County in which the project is located in.

Regulated Drain Considerations

If the water course is, or directly discharges to, a Regulated Drain of the County in which the project is located, the applicant will also need to abide by applicable requirements of the Big Cicero Creek Joint Drainage Board, whether the site is located in an incorporated area or not

TABLE 303.01

Maximum Permissible Velocities in Vegetal-Lined Channels (1)			
Cover	*Channel Slope Range (Percent)* **(3)**	*Permissible Velocity* **(2)**	
		Erosion Resistant Soils (ft. per sec.) **(4)**	*Easily Eroded Soils (ft. per sec.)* **(4)**
Bermuda Grass	0-5 5-10 Over 10	8 7 6	6 5 4
Bahia Buffalo Grass Kentucky Bluegrass Smooth Brome Blue Grama	 0-5 5-10 Over 10	 7 6 5	 5 4 3
Grass Mixture Reed Canary Grass	**(3)** 0-5 5-10	5 4	4 3
Lespedeza Sericea Weeping Lovegrass Yellow Bluestem Redtop Alfalfa Red Fescue	**(4)** 0-5 5-10	3.4	2.5
Common Lespedeza **(5)** Sudangrass **(5)**	**(6)** 0-5	3.5	2.5

(1) From Natural resource Conservation Service, SCS-TP-61, "Handbook of Channel Design for Soil and Water Conservation".

(2) Use velocities exceeding 5 feet per second only where good channel ground covers and proper maintenance can be obtained.

(3) Do not use on slopes steeper than 10 percent except for vegetated side slopes in combination with a stone, concrete, or highly resistant vegetative center section.

(4) Do not use on slopes steeper than 5 percent except for vegetated side slopes in combination with a stone, concrete, or highly resistant vegetative center section.

(5) Annuals - use on mild slopes or as temporary protection until permanent covers are established.

(6) Use on slopes steeper than 5 percent is not recommended.

TABLE 303.02

Typical Values of Manning's "n"		
Material	*Manning's "n"*	*Maximum Velocities (feet/second)*
◆ **Closed Conduits**		
Concrete	0.013	10
Vitrified Clay	0.013	10
HDPE	0.012	10
PVC	0.011	10
◆ **Circular CMP, Annular Corrugations, 2 2/3 x ½ inch**		
Unpaved	0.024	7
25% Paved	0.021	7
50% Paved	0.018	7
100% Paved	0.013	7
Concrete Culverts	0.013	10
HDPE or PVC	0.012	10
◆ **Open Channels**		
Concrete, Trowel Finish	0.013	10
Concrete, Broom Finish	0.015	10
Gunite	0.018	10
Riprap Placed	0.030	10
Riprap Dumped	0.035	10
Gabion	0.028	10
New Earth **(1)**	0.025	4
Existing Earth **(2)**	0.030	4
Dense Growth of Weeds	0.040	4
Dense Weeds and Brush	0.040	4
Swale with Grass	0.035	4

Source of manning "n" values: HERPICC Stormwater Drainage Manual, July 1995.

(1) New earth (uniform, sodded, clay soil)

(2) Existing earth (fairly uniform, with some weeds).

TABLE 303.03

Building Pad Elevations With Respect to Overflow Path Invert Elevations		
Drainage Area (acres)	**Building Pad or Flood Protection Grade Above Overflow Path Invert (ft.)**	**Building Pad or Flood Protection Grade Above Overflow Path Invert, if Overflow Path is in the Street (ft.)**
Up to 5	2.5	1.5
6-10	3.0	1.5
11-15	3.25	1.75
16-20	3.5	1.75
21-30	4.0	2.0
30-50	4.25	2.0

FIGURE 305.01

Street and Gutter Capacities (continuous grade)

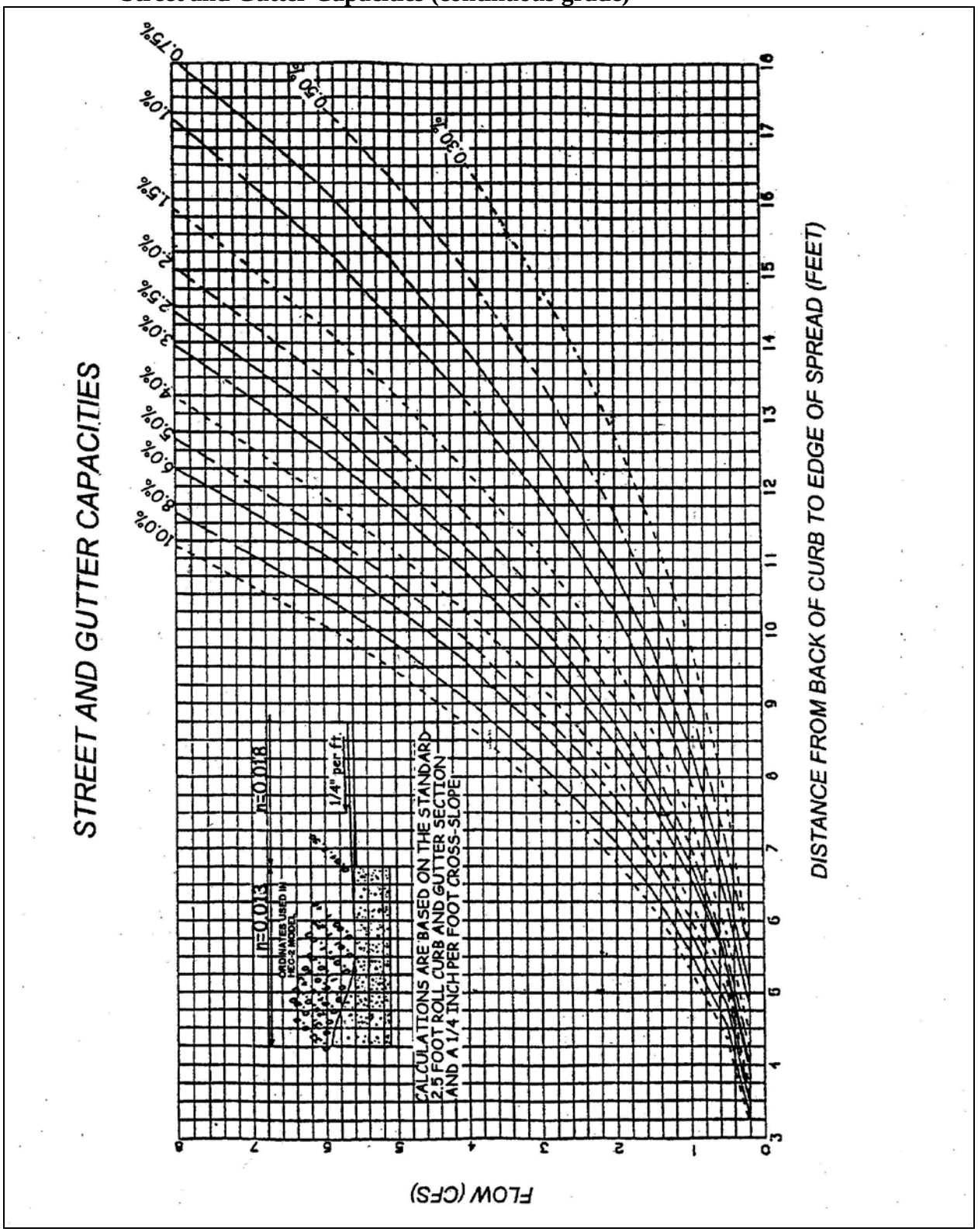

CHAPTER 400 STORM SEWER PIPES AND OPEN CULVERT MATERIALS

SECTION 401 GENERAL

401.01
Minimum Size for
Storm Sewers

The minimum diameter of all storm sewers shall be 12 inches. When the minimum 12-inch diameter pipe will not limit the rate of release to the required amount, the rate of release for detention storage shall be controlled by an orifice plate or other device, subject to acceptance of the Big Cicero Creek Joint Drainage Board.

401.02
Materials

Storm sewer manholes and inlets shall be constructed of precast reinforced concrete. Material and construction shall conform to the latest edition of the Indiana Department of Transportation (INDOT) "Standard Specifications", Sections 702 and 720.

Pipe and fittings used in storm sewer construction shall be extra-strength clay pipe (ASTM C-12), ductile iron pipe (AWWA C-151), poly vinyl chloride pipe (AASHTO M252), polyethylene pipe (AASHTO M252 or AASHTO M294), or concrete pipe (AASHTO M170). Other pipe and fittings not specified herein or in Sections 907-908 of the latest edition of the INDOT “Standard Specifications” may be used only when specifically authorized by the Big Cicero Creek Joint Drainage Board. Pipe joints shall be flexible and watertight and shall conform to the requirements of Section 906, of the latest edition of the INDOT "Standard Specifications". **If the storm sewer pipe is to be placed within a road right-of-way or in an area subject to loading, the pipe and fittings shall be Class III concrete. A higher class concrete may be required for cover depths in excess of 10 feet or less than 2 feet.**

CHAPTER 500 INSTALLATION OF STORMWATER FACILITIES

SECTION 501 GENERAL

501.01
Pipe Cover, Grade, and Separation from Sanitary Sewers

Pipe grade shall be such that, in general, a minimum of 2.0 feet of cover is maintained over the top of the pipe. If the pipe is to be placed under pavement, then the minimum pipe cover shall be 2.5 feet from top of pavement to top of pipe. Uniform slopes shall be maintained between inlets, manholes and inlets to manholes. Final grade shall be set with full consideration of the capacity required, sedimentation problems, and other design parameters. Minimum and maximum allowable slopes shall be those capable of producing velocities of between 2.5 and 10 feet per second, respectively, when the sewer is flowing full. Maximum permissible velocities for various storm sewer materials are listed in **Table 501-1**. A minimum of 2.0 feet of vertical separation between storm sewers and sanitary sewers shall be required. When this is not possible, the sanitary sewer must be encased in concrete or ductile steel within 5 feet, each side, of the crossing centerline.

Also, a set of standard detail drawings may be available through the Surveyor's Office of the County in which the project is located that provides guidance on the design and installation of various hydraulic structures that may not have been covered in this chapter. Adherence to the noted standard details shall be required in addition to other requirements in this chapter. In case of discrepancy, the most restrictive requirement shall apply.

501.02
Alignment

Storm sewers shall be straight between manholes and/or inlets.

501.03
Manholes/Inlets

All Manholes and Inlets must be pre-stamped with an appropriate message per requirements of the County in which the project is located. Manholes and/or inlets shall be installed to provide human access to continuous underground storm sewers for the purpose of inspection and maintenance. The casting access minimum inside diameter shall be no less than 22 inches or a rectangular opening of no less than 22 inches by 22 inches. Manholes shall be provided at the following locations:

1. Where two or more storm sewers converge.

2. Where pipe size or the pipe material changes.

3. Where a change in horizontal alignment occurs.

4. Where a change in pipe slope occurs.

5. At intervals in straight sections of sewer, not to exceed the maximum allowed. The maximum distance between storm sewer manholes shall be as shown in **Table 501-2**.

TABLE 501-2

Maximum Distance Between Manholes	
Size of Pipe (Inches)	**Maximum Distance (Feet)**
All sizes	400

In addition to the above requirements, a minimum drop of 0.1 foot through manholes and inlet structures should be provided. Pipe slope should not be so steep that inlets surcharge (i.e. hydraulic grade line should remain below rim elevation).

Manhole/inlet inside sizing shall be according to the Standard Detail Drawings of the County in which the project is located. Note that the Big Cicero Creek Joint Drainage Board will require 2 foot sumps in the last structure before the pond, with the structure placed within 15 feet of the back of curb of a roadway. If the last structure does not meet this criterion, then the structure must be moved up the pipe run until this requirement is satisfied. Also, if this structure is a curb inlet and the structure sizing chart would allow this to be a 2' x 2' box, it must be upsized to a 48" manhole because of the 2' sump.

501.04
Installation and Workmanship

Bedding and backfill materials around storm sewer pipes, sub-drains, and the associated structures shall be according to requirements of the County in which the project is located. The specifications for the construction of storm sewers and sub-drains, including backfill requirements, shall not be less stringent than those set forth in the latest edition of the "INDOT Standard Specifications". Additionally, ductile iron pipe shall be laid in accordance with American Water Works Association (AWWA) C-600 and clay pipe shall be laid in accordance with either American Society of Testing Materials (ASTM) C-12 or the appropriate American Association of State Highway and Transportation Officials (AASHTO) specifications. Dips/sags on newly installed storm systems will not be allowed. Also, infiltration from cracks, missing pieces, and joints shall not be allowed. Variations from these standards must be justified and receive written acceptance from the Big Cicero Creek Joint Drainage Board. All structures shall require inspection prior to backfill.

501.05
Special Hydraulic Structures

Special hydraulic structures required to control the flow of water in storm runoff drainage systems include junction chambers, drop manholes, stilling basins, and other special structures. The use of these structures shall be limited to those locations justified by prudent planning and by careful and thorough hydraulic engineering analysis. Certification of special structures by a certified Structural Engineer may also be required.

The use of Stormwater lift stations are not allowed within the Big Cicero Creek Watershed.

501.06
Connections to Storm Sewer System

To allow any connections to the storm sewer system, provisions for the connections shall be shown in the drainage calculations for the system. Specific language shall be provided

in the protective covenants, on the record plat, or with the parcel deed of record, noting the ability or inability of the system to accommodate any permitted connections, for example, sump pumps and footing drains. No drainage calculations would be necessary for tying into subsurface drains.

1. **Sump pumps** installed to receive and discharge groundwater or other stormwater shall be connected to the storm sewer. When connection to the storm sewer is not possible, discharge into other designated storm drainage facilities may be considered, if approved by the Big Cicero Creek Joint Drainage Board. Sump pumps installed to receive and discharge floor drain flow or other sanitary sewage shall be connected to the sanitary sewers. A sump pump shall be used for one function only, either the discharge of stormwater or the discharge of sanitary sewage, each being connected to the respective receiving system only.

2. **Footing drains and perimeter drains** shall be connected to Manholes or Curb inlets, where possible, or to designated storm sewers or discharged into designated storm drainage channels/swales and not to the sanitary sewer.

3. All **roof downspouts**, roof drains, or roof drainage piping shall discharge onto the ground and shall not be directly connected to the storm drainage system. Variation from this requirement may be requested and granted by the Big Cicero Creek Joint Drainage Board in special circumstances. No downspouts or roof drains shall be connected to the sanitary sewers.

4. **Garage and Basement floor drains and water softener discharge** shall not be connected to the storm sewers.

5. **Swimming Pool drains** shall not be connected to the storm sewers unless the water is dechlorinated prior to being connected to the storm sewer.

In addition, none of the devices noted under items 3, 4, and 5 (above) shall be connected to any street underdrains, unless specifically authorized by the Big Cicero Creek Joint Drainage Board.

TABLE 501-1

Typical Values of Manning's "n"		
Material	*Manning's "n"*	*Maximum Velocities (feet/second)*
☐ Closed Conduits		
Concrete	0.013	10
Vitrified Clay	0.013	10
HDPE	0.012	10
PVC	0.011	10
☐ Circular CMP, Annular Corrugations, 2 2/3 x ½ inch		
Unpaved	0.024	7
25% Paved	0.021	7
50% Paved	0.018	7
100% Paved	0.013	7
Concrete Culverts	0.013	10
HDPE or PVC	0.012	10
☐ Open Channels		
Concrete, Trowel Finish	0.013	10
Concrete, Broom Finish	0.015	10
Gunite	0.018	10
Riprap Placed	0.030	10
Riprap Dumped	0.035	10
Gabion	0.028	10
New Earth **(1)**	0.025	4
Existing Earth **(2)**	0.030	4
Dense Growth of Weeds	0.040	4
Dense Weeds and Brush	0.040	4
Swale with Grass	0.035	4

Source of manning "n" values: HERPICC Stormwater Drainage Manual, July 1995.

(1) New earth (uniform, sodded, clay soil)

(2) Existing earth (fairly uniform, with some weeds).

CHAPTER 600 EROSION AND SEDIMENT CONTROL FOR CONSTRUCTION SITES

SECTION 601 GENERAL

601.01
Purpose and
Background

The requirements contained in this Chapter are intended to prevent stormwater pollution resulting from soil erosion and sedimentation or from mishandling of solid and hazardous waste. Practices and measures included herein should assure that no foreign substance, (e.g. sediment, construction debris, chemicals) be transported from a site and allowed to enter any drainageway, whether intentionally or accidentally, by machinery, wind, rain, runoff, or other means.

The major pollutant of concern during construction is sediment. Natural erosion processes are accelerated at a project site by the construction process for a number of reasons, including the loss of surface vegetation and compaction damage to the soil structure itself, resulting in reduced infiltration and increased surface runoff. Clearing and grading operations also expose subsoils which are often poorly suited to re-establish vegetation, leading to longer term erosion problems.

Problems associated with construction site erosion include: transport of pollutants attached to displaced sediment; increased turbidity (reduced light) in receiving waters; and recreational use impairment. The deposited sediment may pose direct toxicity to wildlife, or smother existing spawning areas and habitat. This siltation also reduces the flow capacity of waterways, resulting in increased flood hazards to the public.

Other pollutants of concern during the construction process are hazardous wastes or hydrocarbons associated with the construction equipment or processes. Examples include concrete washoff, paints, solvents, and hydrocarbons from refueling operations. Poor control and handling of toxic construction materials pose an acute (short-term) or chronic (long-term) risk of death to aquatic life, wildlife, and the general public.

Also, a set of standard detail drawings may be available through the Surveyor's Office of the County in which the project is located that provides guidance on the design and installation of various hydraulic structures that may not have been covered in this chapter. Adherence to the noted standard details shall be required in addition to other requirements in this chapter. In case of discrepancy, the most restrictive requirement shall apply.

601.01
Abbreviations and
Definitions

The following abbreviations and definitions apply throughout this chapter:

Abbreviations

COE:	United States Army Corps of Engineers
IDEM:	Indiana Department of Environmental Management
IDNR:	Indiana Department of Natural Resources

INDOT:	Indiana Department of Transportation
MS4:	Municipal separate storm sewer system
NRCS:	USDA-Natural Resources Conservation Service
SWCD:	Soil and Water Conservation District
USDA:	United States Department of Agriculture

Definitions

Construction Activity:	Land-disturbing activities associated with the construction of infrastructure and structures. This term does not include routine ditch maintenance or minor landscaping projects.
Construction Plan:	A representation of a project site and all activities associated with the project. The plan includes the location of the project site, buildings and other infrastructure, grading activities, schedules for implementation and other pertinent information related to the project site. A stormwater pollution prevention plan is a part of the construction plan.
Construction Site Access:	A stabilized stone surface at all points of ingress or egress to a project site, for the purpose of capturing and detaining sediment carried by tires of vehicles or other equipment entering or exiting the project site.
Contractor or Subcontractor:	An individual or company hired by the project site or individual lot owner, their agent, or the individual lot operator to perform services on the project site.
Developer:	Any person financially responsible for construction activity; or an owner of property who sells or leases, or offers for sale or lease, any lots in a subdivision.
Erosion:	The detachment and movement of soil, sediment, or rock fragments by water, wind, ice, or gravity.
Erosion and Sediment Control Measure:	A practice or a combination of practices, to control erosion and resulting sedimentation.

Erosion and Sediment Control System:	The use of appropriate erosion and sediment control measures to minimize sedimentation by first reducing or eliminating erosion at the source and then as necessary, trapping sediment to prevent it from being discharged from or within a project site.
Final Stabilization:	The establishment of permanent vegetative cover or the application of a permanent nonerosive material to areas where all land disturbing activities have been completed and no additional land disturbing activities are planned under the current permit.
Grading:	The cutting and filling of the land surface to a desired slope or elevation.
Impervious Surface:	Surfaces, such as pavement and rooftops, which prevent the infiltration of storm water into the soil.
Individual Building Lot:	A single parcel of land within a multi-parcel development.
Individual Lot Operator:	A contractor or subcontractor working on an individual lot.
Individual Lot Owner:	A person who has financial control of construction activities for an individual lot.
Land-disturbing Activity:	Any manmade change of the land surface, including removing vegetative cover that exposes the underlying soil, excavating, filling, transporting, and grading.
Larger Common Plan of Development or Sale :	A plan, undertaken by a single project site owner or a group of project site owners acting in concert, to offer lots for sale or lease; where such land is contiguous, or is known, designated, purchased or advertised as a common unit or by a common name, such land shall be presumed as being offered for sale or lease as part of a larger common plan. The term also includes phased or other construction activity by a single entity for its own use. (may delete this definition)
Measurable Storm Event:	A precipitation event that results in a total measured precipitation accumulation equal to, or greater than, one-half (0.5) inch of rainfall.
MS4 Area :	A land area comprising one (1) or more places that receives coverage under one (1) NPDES storm water permit regulated by 327 IAC 15-13 or 327 IAC 5-4-6(a)(3) and 327 IAC 5-4-

6(a)(4). (Define in text)

MS4 Operator:	"MS4 operator" means the person responsible for development, implementation, or enforcement of the minimum control measures for a designated MS4 area regulated under 327 IAC 15-13. (define in text)
Peak Discharge:	"Peak discharge" means the maximum rate of flow during a storm, usually in reference to a specific design storm event.
Permanent Stabilization:	The establishment, at a uniform density of seventy percent (70%) across the disturbed area, of vegetative cover or permanent nonerosive material that will ensure the resistance of the soil to erosion, sliding, or other movement.
Phasing of Construction:	Sequential development of smaller portions of a large project site, stabilizing each portion before beginning land disturbance on subsequent portions, to minimize exposure of disturbed land to erosion.
Project Site:	The entire area on which construction activity is to be performed.
Project Site Owner:	The person required to comply with the terms of this chapter, including either a developer or a person who has financial and operational control of construction activities, and project plans and specifications, including the ability to make modifications to those plans and specifications.
Sediment:	Solid material (both mineral and organic) that is in suspension, is being transported, or has been moved from its site of origin by air, water, gravity, or ice and has come to rest on the earth's surface.
Sedimentation:	The settling and accumulation of unconsolidated sediment carried by storm water run-off.
Soil:	The unconsolidated mineral and organic material on the surface of the earth that serves as the natural medium for the growth of plants.
SWPPP:	or "Storm water pollution prevention plan" means a plan developed to minimize the impact of storm water pollutants resulting from construction activities.

Storm water quality measure:	A practice, or a combination of practices, to control or minimize pollutants associated with storm water run-off.
Strip Development:	A multi-lot project where building lots front on an existing road.
Subdivision:	Any land that is divided or proposed to be divided into lots, whether contiguous or subject to zoning requirements, for the purpose of sale or lease as part of a larger common plan of development or sale.
Temporary Stabilization:	The covering of soil to ensure its resistance to erosion, sliding, or other movement. The term includes vegetative cover, anchored mulch, or other non-erosive material applied at a uniform density of seventy percent (70%) across the disturbed area.
Tracking:	The deposition of soil that is transported from one (1) location to another by tires, tracks of vehicles, or other equipment.
Trained Individual:	An individual who is trained and experienced in the principles of stormwater quality, including erosion and sediment control, is a registered professional, is a Certified Professional in Erosion and Sediment Control, or is deemed qualified by the Big Cicero Creek Joint Drainage Board.

SECTION 602 BASIC POLICIES AND PROCEDURES

602.01
Applicability and Exemptions

The Big Cicero Creek Joint Drainage Board will require a Stormwater Pollution Prevention Plan (SWPPP), which includes erosion and sediment control measures and materials handling procedures, to be submitted as part of the construction plans and specifications. Any project located within the Big Cicero Creek Watershed which falls under the jurisdictional authority of of a County government and includes clearing, grading, excavation, and other land disturbing activities resulting in the disturbance of 1 acre or more of total land area is subject to the requirements of this Chapter. This includes both new development and re-development. This chapter also applies to disturbances of less than one 1 acre of land that are part of a larger common plan of development or sale if the larger common plan will ultimately disturb one (1) or more acres of land, within the area under the jurisdictional authority of a County government in the Big Cicero Creek Watershed. Section 602.03 of this Chapter provides guidelines for calculating land disturbance. Projects meeting the coverage requirements of 327 IAC 15-5 (Rule 5) shall also be in compliance with 327 IAC 15-5.

The requirements under this Chapter do not apply to the following activities:

a. agricultural land disturbing activities; or
b. forest harvesting activities.

The requirements under this Chapter do not apply to the following activities, provided other applicable State permits contain provisions requiring immediate implementation of soil erosion control measures:

a. Landfills that have been issued a certification of closure under 329 IAC 10.
b. Coal mining activities permitted under IC 14-34.
c. Municipal solid waste landfills that are accepting waste pursuant to a permit issued by the Indiana Department of Environmental Management under 329 IAC 10 that contains equivalent stormwater requirements, including the expansion of landfill boundaries and construction of new cells either within or outside the original solid waste permit boundary.

For an individual lot where land disturbance is expected to be one (1) acre or more, the individual lot owner must complete their own notice of intent letter, apply for a stormwater permit from the Big Cicero Creek Joint Drainage Board, and ensure that a sufficient construction and stormwater pollution prevention plan is completed and submitted in accordance with Chapter 100; regardless of whether the individual lot is part of a larger permitted project site.

An individual lot with land disturbance less than one (1) acre, located within a larger permitted project site, is considered part of the larger permitted project site, and the individual lot operator must comply with the terms and conditions of the stormwater permit approved for the larger project site. The stormwater permit application for the larger project site must include typical detailed erosion and sediment control measures for individual lots. In addition, these individual lots are required to submit Individual Lot Plot Plan Permit applications prior to receiving a building permit. Details of the permitting process are contained in Chapter 100.

It will be the responsibility of the project site owner to complete a stormwater permit application and ensure that a sufficient construction plan is completed and submitted to the Big Cicero Creek Joint Drainage Board in accordance with Chapter 100 of these Standards. It will be the responsibility of the project site owner to ensure compliance with applicable ordinances and standards of the appropriate Big Cicero Creek Watershed jurisdiction during the construction activity and implementation of the construction plan, and to notify the Big Cicero Creek Joint Drainage Board with a sufficient notice of termination letter upon completion of the project and stabilization of the site. However, all persons engaging in construction and land disturbing activities on a permitted project site must comply with the requirements of this Chapter and the applicable ordinances of the appropriate Big Cicero Creek Watershed jurisdiction.

602.02
Policy on
Stormwater Pollution
Prevention

Effective stormwater pollution prevention on construction sites is dependent on a combination of preventing movement of soil from its original position (erosion control), intercepting displaced soil prior to entering a waterbody (sediment control), and proper on-site materials handling. The developer must submit to the Big Cicero Creek Joint Drainage Board a SWPPP with detailed erosion and sediment control plans as well as a narrative describing materials handling and storage, and construction sequencing. The following principles apply to all

land-disturbing activities and should be considered in the preparation of a Stormwater Pollution Prevention Plan within the Big Cicero Creek Watershed.

A. Minimize the potential for soil erosion by designing a development that fits the topography and soils of the site. Deep cuts and fills in areas with steep slopes should be avoided wherever possible, and natural contours should be followed as closely as possible.

B. Existing natural vegetation should be retained and protected wherever possible. Areas immediately adjacent (within 35 feet of top of bank) to watercourses and lakes also should be left undisturbed wherever possible. Unvegetated or vegetated areas with less than 70% cover that are scheduled or likely to be left inactive for 15 days or more must be temporarily or permanently stabilized with measures appropriate for the season to reduce erosion potential. Alternative measures to site stabilization may be acceptable if the project site owner or their representative can demonstrate they have implemented and maintained erosion and sediment control measures adequate to prevent sediment discharge from the inactive area.

C. All activities on a site should be conducted in a logical sequence so that the smallest practical area of land will be exposed for the shortest practical period of time during development.

D. The length and steepness of designed slopes should be minimized to reduce erosion potential. Drainage channels and swales must be designed and adequately protected so that their final gradients and resultant velocities will not cause erosion in the receiving channel or at the outlet. Methods for determining acceptable velocities are included in the Stormwater Technical Standards Manual.

E. Sediment-laden water which otherwise would flow from the project site shall be treated by erosion and sediment control measures appropriate to minimize sedimentation. A stable construction site access shall be provided at all points of construction traffic ingress and egress to the project site.

F. Appropriate measures shall be implemented to prevent wastes or unused building materials, including, garbage, debris, packaging material, fuels and petroleum products, hazardous materials or wastes, cleaning wastes, wastewater, concrete truck washout, and other substances from being carried from a project site by runoff or wind. Identification of areas where concrete truck washout is permissible must be clearly posted at appropriate areas of the site. Wastes and unused building materials shall be managed and disposed of in accordance with all applicable State statutes and regulations. Proper storage and handling of materials such as fuels or hazardous wastes, and spill prevention and cleanup measures (including having spill response equipment on-site) shall be implemented to minimize the potential for pollutants to contaminate surface or ground water or degrade soil quality.

G. Public or private roadways shall be kept cleared of accumulated sediment that is a result of runoff or tracking. Bulk clearing of

accumulated sediment shall not include flushing the area with water. Cleared sediment shall be redistributed or disposed of in a manner that is in accordance with all applicable statutes and regulations.

H. Collected runoff leaving a project site must be either discharged directly into a well-defined, stable receiving channel, or diffused and released to adjacent property without causing an erosion or pollutant problem to the adjacent property owner.

I. Natural features, including wetlands, shall be protected from pollutants associated with stormwater runoff.

602.03
Calculating Total Area of Land Disturbance

In calculating the total area of land disturbance, for the purposes of determining applicability of this Chapter to the project, the following guidelines should be used:

A. Off-site construction activities that provide services (for example, road extensions, sewer, water, and other utilities) to a land disturbing project site, must be considered as a part of the total land disturbance calculation for the project site, when the activity is under the control of the project site owner.

B. Strip developments will be considered as one (1) project site and must comply with this Chapter unless the total combined disturbance on all individual lots is less than one (1) acre and is not part of a larger common plan of development or sale.

C. To determine if multi-lot project sites are regulated by a jurisdiction within the Big Cicero Creek Watershed, the area of land disturbance shall be calculated by adding the total area of land disturbance for improvements, such as, roads, utilities, or common areas, and the expected total disturbance on each individual lot, as determined by the following:

i. For a single-family residential project site where the lots are one-half (0.5) acre or more, one-half (0.5) acre of land disturbance must be used as the expected lot disturbance.
ii. For a single-family residential project site where the lots are less than one half (0.5) acre in size, the total lot must be calculated as being disturbed.
iii. To calculate lot disturbance on all other types of projects sites, such as industrial and commercial projects project sites, a minimum of one (1) acre of land disturbance must be used as the expected lot disturbance, unless the lots are less than one (1) acre in size, in which case the total lot must be calculated as being disturbed.

602.04
Common Erosion and Sediment Control Practices

All erosion control and stormwater pollution prevention measures required to comply with the appropriate Big Cicero Creek jurisdiction's Ordinance shall meet the design criteria, standards, and specifications similar to or the same as those outlined in the latest editions of the *Indiana Storm Water Quality Manua*l

(ISWQM), or other comparable and reputable references. **Table 602-1** lists some of the more common and effective practices for preventing stormwater pollution from construction sites. Details of each practice can be found in the ISWQM or in **Appendix 602-1**. These practices should be used to protect ***every*** potential pollution pathway to stormwater conveyances.

602.05
Individual Lot
Controls

From the time construction on an individual lot begins, until the individual lot is stabilized, the builder must take steps to:

- protect adjacent properties from sedimentation
- prevent mud/sediment from depositing on the street
- protect drainageways from erosion and sedimentation
- prevent sediment laden water from entering storm sewer inlets.

A generic erosion control plan for individual lots is provided as **Exhibit 602-1**. A typical plan should include perimeter silt fence, stabilized construction entrance, curb inlet protection, drop inlet protection, stockpile containment, stabilized drainage swales, downspout extensions, temporary seeding and mulching, and permanent vegetation. Every relevant measure shall be installed at each individual lot site.

Construction sequence on individual lots should be as follows:

1. Clearly delineate areas of trees, shrubs, and vegetation that are to be undisturbed. To prevent root damage, the areas delineated for tree protection should be at least the same diameter as the crown.
2. Install perimeter silt fence at construction limits. Position the fence to intercept runoff prior to entering drainage swales.
3. Avoid disturbing drainage swales if vegetation is established. If drainage swales are bare, install erosion control blankets or sod to immediately stabilize.
4. Install drop inlet protection for all inlets on the property.
5. Install curb inlet protection, on both sides of the road, for all inlets along the property frontage and along the frontage of adjacent lots, or install temporary catch basin inserts in each inlet and frequently clean.
6. Install gravel construction entrance that extends from the street to the building pad.
7. Perform primary grading operations.
8. Contain erosion from any soil stockpiles created on-site with silt fence around the base.
9. Establish temporary seeding and straw mulch on disturbed areas.
10. Construct the home and install utilities.
11. Install downspout extenders once the roof and gutters have been constructed. Extenders should outlet to a stabilized area.
12. Re-seed any areas disturbed by construction and utilities installation with temporary seed mix within 3 days of completion of disturbance.
13. Grade the site to final elevations. Add topsoil as needed to minimize erosion of underlying soil and to quickly establish grass.
14. Install permanent seeding or sod.

All erosion and sediment control measures must be properly maintained throughout construction. Temporary and permanent seeding should be watered as needed until established. For further information on individual lot erosion and sediment control, please see the "Individual Lot Erosion and Sediment Control Plan and Certification" form in **Exhibit 602-1** or the IDNR, Division of

Soil Conservation's pamphlet titled "Erosion and Sediment Control for Individual Building Sites".

602.06 Inspection, Maintenance, Record Keeping, and Reporting

Following approval of the stormwater management permit by the Big Cicero Creek Joint Drainage Board and commencement of construction activities, the Big Cicero Creek Joint Drainage Board has the authority to conduct inspections of the site to ensure full compliance with the provisions of this Chapter, the *Indiana Storm Water Quality Manual (ISWQM)*, and the terms and conditions of the approved permit.

A self-monitoring program must be implemented by the project site owner to ensure the stormwater pollution prevention plan is working effectively. A trained individual, acceptable to the Big Cicero Creek Joint Drainage Board, shall perform a written evaluation of the project site by the end of the next business day following each measurable storm event. If there are no measurable storm events within a given week, the site should be monitored at least once in that week. Weekly inspections by the trained individual shall continue until the entire site has been stabilized and a "verified" copy of the Notice of Termination has been issued. The trained individual should look at the maintenance of existing stormwater pollution prevention measures, including erosion and sediment control measures, drainage structures, and construction materials storage/containment facilities, to ensure they are functioning properly. The trained individual should also identify additional measures, beyond those originally identified in the stormwater pollution prevention plan, necessary to remain in compliance with all applicable statutes and regulations. A standard form to record the self-monitoring/inspection results is provided as **Exhibit 602-2**.

The resulting evaluation reports must include the name of the individual performing the evaluation, the date of the evaluation, problems identified at the project site, and details of maintenance, additional measures, and corrective actions recommended and completed.

The stormwater pollution prevention plan shall serve as a guideline for stormwater quality, but should not be interpreted to be the only basis for implementation of stormwater quality measures for a project site. The project site owner is responsible for implementing, in accordance with this Chapter, all measures necessary to adequately prevent polluted stormwater runoff. Recommendations by the trained individual for modified stormwater quality measures should be implemented.

Although self-monitoring reports do not need to be submitted to the Big Cicero Creek Joint Drainage Board, the Big Cicero Creek Joint Drainage Board has the right to request complete records of maintenance and monitoring activities involving stormwater pollution prevention measures. All evaluation reports for the project site must be made available to the Big Cicero Creek Joint Drainage Board, in an organized fashion, within forty-eight (48) hours upon request.

Practice No.	BMP Description	Applicability	Fact Sheet
1	Site Assessment	All sites	ISWQM (Ch.2)
2	Development Of A Construction Sequence Schedule	All sites	ISWQM (Ch. 5)
3	Tree Preservation and Protection	Nearly all sites	ISWQM
4	Temporary Construction Ingress/Egress Pad	All sites	ISWQM
5	Wheel Wash	All sites	CN - 101
6	Silt Fence	Small drainage areas	ISWQM
7	Surface Roughening	Sites with slopes that are to be stabilized with vegetation	ISWQM
8	Temporary Seeding	Areas of bare soil where additional work is not scheduled to be performed for a minimum of 15 days	ISWQM
9	Mulching	Temporary surface stabilization	ISWQM
10	Erosion Control Blanket (Surface)	Temporary surface stabilization, anchor for mulch	ISWQM
11	Temporary Diversion	Up-slope and down-slope sides of construction site, above disturbed slopes within construction site	ISWQM
12	Rock Check Dam	2 acres maximum contributing drainage area	ISWQM
13	Temporary Slope Drain	Sites with cut or fill slopes	ISWQM
14	Straw Bale Dam	Small drainage areas	ISWQM
15	Geotextile Fabric Drop Inlet Protection	1 acre maximum contributing drainage area	ISWQM
16	Insert (Basket) Curb Inlet Protection	1 acre maximum contributing drainage area	ISWQM
17	Stone Bag Curb Inlet Protection	1 acre maximum contributing drainage area	ISWQM
18	Temporary Sediment Trap	5 acre maximum contributing drainage area	ISWQM
19	Temporary Dry Sediment Basin	30 acre maximum contributing drainage area	ISWQM
20	Dewatering Structures	Sites requiring dewatering	CN-102
21	Dust Control	All sites	ISWQM
22	Spill Prevention and Control	All sites	CN - 103
23	Solid Waste Management	All sites	CN - 104
24	Hazardous Waste Management	All sites	CN - 105

* See ISWQM Chapter 7 (2007 or latest version), unless otherwise noted. (http://www.in.gov/idem/stormwater/)

TABLE 602-1: Common Stormwater Pollution Control Practices for Construction Sites

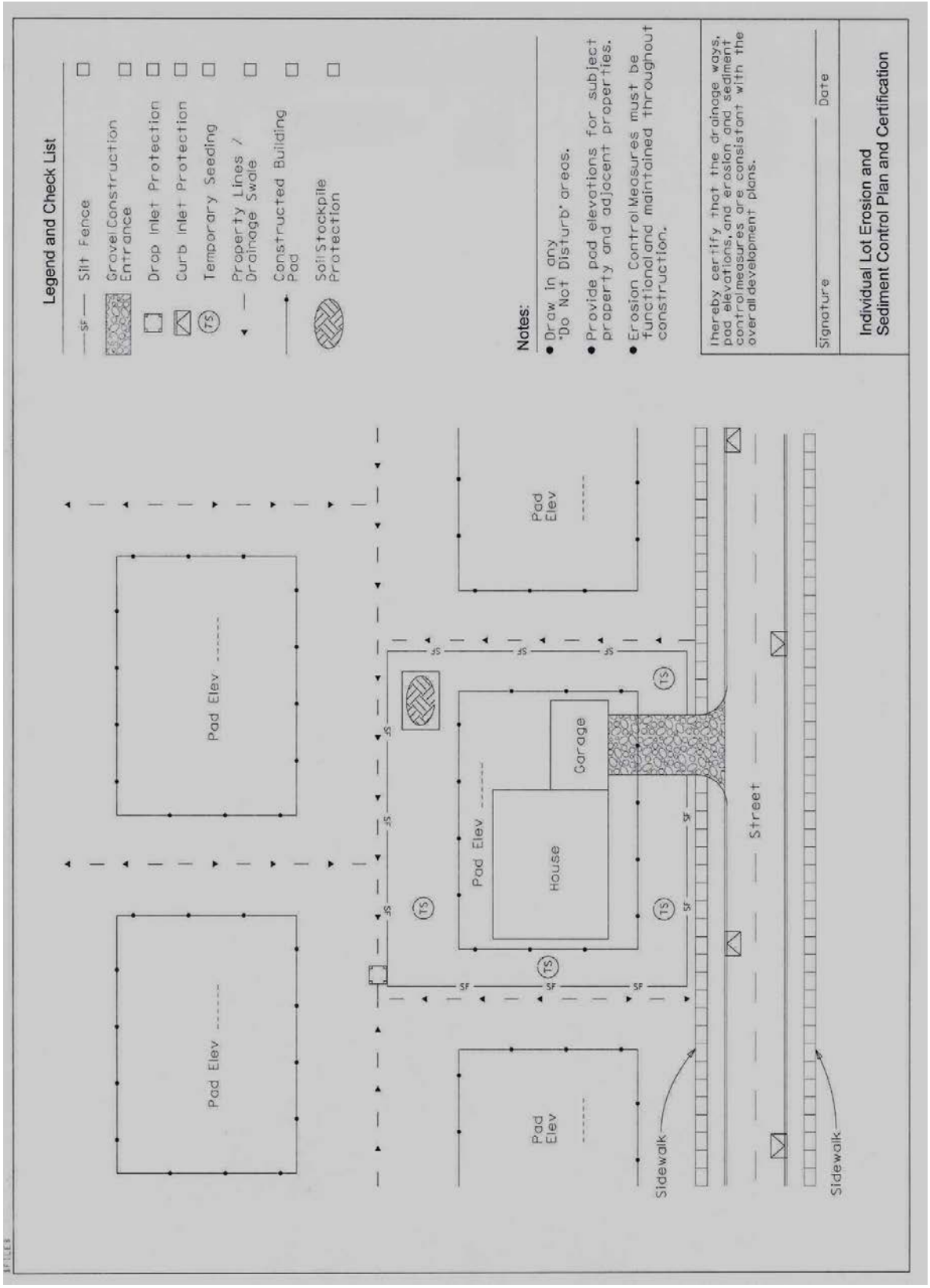

Exhibit 602-1.: Individual Lot Typical Erosion & Sediment Control Plan and Certification

Date: _____
Project: _____
Inspected by: _____

Type of Inspection: ☐ Scheduled Weekly ☐ Rain Event

CONSTRUCTION SITE INSPECTION AND MAINTENANCE LOG
(To be Completed by Property Owner or Agent)

All stormwater pollution prevention BMPs shall be inspected and maintained as needed to ensure continued performance of their intended function during construction and shall continue until the entire site has been stabilized and a Notice of Termination has been issued. An inspection of the project site must be completed by the end of the next business day following each measurable storm event. If there are no measurable storm events within a given week, the site should be monitored at least once in that week. Maintenance and repair shall be conducted in accordance with the accepted site plans. This log shall be kept as a permanent record and must be made available to the Big Cicero Creek Joint Drainage Board in an organized fashion, within forty-eight (48) hours upon request.

Yes	No	N/A	
			1. Is the site information posted at the entrance?
			2. Are all necessary permits attained and special provisions being implemented?
			3. Is a construction entrance installed and functioning properly?
			4. Are construction staging & parking areas restricted to areas designated on the plans?
			5. Are public and private streets clean of sediment, debris and mud?
			6. Are appropriate practices installed where stormwater leaves the site?
			7. Are all discharge points (outfalls) free of erosion or sediment transport?
			8. Has all silt fence been installed properly and being maintained? *(entrenched - upright - fabric not torn - terminated to higher ground - properly joined at ends)*
			9. Are sediment basins & traps installed according to plan & pipe or rock spillways functional?
			10. Are other sediment control barriers in place and functioning properly?
			11. Is the earthwork for erosion control practices properly graded, seeded and/or mulched?
			12. Are diversion swales and/or waterbars installed to plan & protected?
			13. Do perimeter practices have adequate capacity & do they need to be cleaned out?
			14. Is inlet protection installed properly on all functioning inlets & being maintained?
			15. Is catch basin insert protection installed where required & being maintained?
			16. Have swales and ditches been stabilized or protected?
			17. Are stormwater outlets adequately stabilized?
			18. Has temporary stabilization of disturbed ground been addressed? (dormant for 15 days?)
			19. Is permanent stabilization of disturbed ground progressing on all completed areas?
			20. Has hard or soft armoring been installed where natural vegetation will erode?
			21. Do water pumping operations have a protected outlet and discharge clear water?
			22. Are all dewatering structures functioning properly?

Date: _____
Project: _____
Inspected by: _____

Type of Inspection: ☐ Scheduled Weekly ☐ Rain Event

			23. Is a designated equipment washout area established, clearly marked and being utilized?
			24. Is solid waste properly contained & a stable access provided to the storage & pickup area?
			25. Are fuel tanks and other hazardous materials safely stored and protected?
			26. Is spill response equipment on-site and easily accessible?
			27. Are temporary soil stockpiles in approved areas & properly protected?

If you answered "no" to any of the above questions, describe any corrective action which must be taken to remedy the problem and when the corrective actions are to be completed.

_____
_____
_____
_____
_____
_____
_____
_____
_____
_____
_____
_____
_____
_____

APPENDIX 602-1

CONSTRUCTION BMP FACT SHEETS

BMP CN – 101
WHEEL WASH

DESCRIPTION

When a stabilized construction entrance is not preventing sediment from being tracked onto pavement, a wheel wash may be installed. Wheel washing is generally an effective BMP when installed with careful attention to topography. For example, a wheel wash can be detrimental if installed at the top of a slope abutting a right-of-way where the water from the dripping truck can run unimpeded into the street. Pressure washing combined with an adequately sized and surfaced pad with direct drainage to a large 10-foot x 10-foot sump can be very effective.

ADVANTAGES

1. Wheel washes reduce the amount of sediment transported onto paved roads by motor vehicles.

DESIGN CRITERIA

1. Suggested details are shown in Figure CN-101-A. The Big Cicero Creek Joint Drainage Board may allow other designs.
2. A minimum of 6 inches of asphalt treated base (ATB) over crushed base material or 8 inches over a good subgrade is recommended to pave the wheel wash.
3. Use a low clearance truck to test the wheel wash before paving. Either a belly dump or lowboy will work well to test clearance.
4. Keep the water level from 12 to 14 inches deep to avoid damage to truck hubs and filling the truck tongues with water.
5. Midpoint spray nozzles are only needed in extremely muddy conditions.
6. Wheel wash systems should be designed with a small grade change, 6 to 12 inches for a 10-foot-wide pond, to allow sediment to flow to the low side of pond to help prevent re-suspension of sediment.
7. A drainpipe with a 2- to 3-foot riser should be installed on the low side of the pond to allow for easy cleaning and refilling.
8. Polymers may be used to promote coagulation and flocculation in a closed-loop system. Polyacrylamide (PAM) added to the wheel wash water at a rate of 0.25 - 0.5 pounds per 1,000 gallons of water increases effectiveness and reduces cleanup time.
9. If PAM is already being used for dust or erosion control and is being applied by a water truck, the same truck can be used to change the wash water.
10. The wheel wash should start out the day with fresh water. The wash water should be changed a minimum of once per day.
11. On large earthwork jobs where more than 10-20 trucks per hour are expected, the wash water will need to be changed more often.
12. Wheel wash or tire bath wastewater shall be discharged to a separate on-site treatment system, such as closed-loop recirculation or land application, or to the sanitary sewer with proper local sewer utility approval.

REFERENCE

City of Tacoma, Surface Water Management Manual, 2003 or later

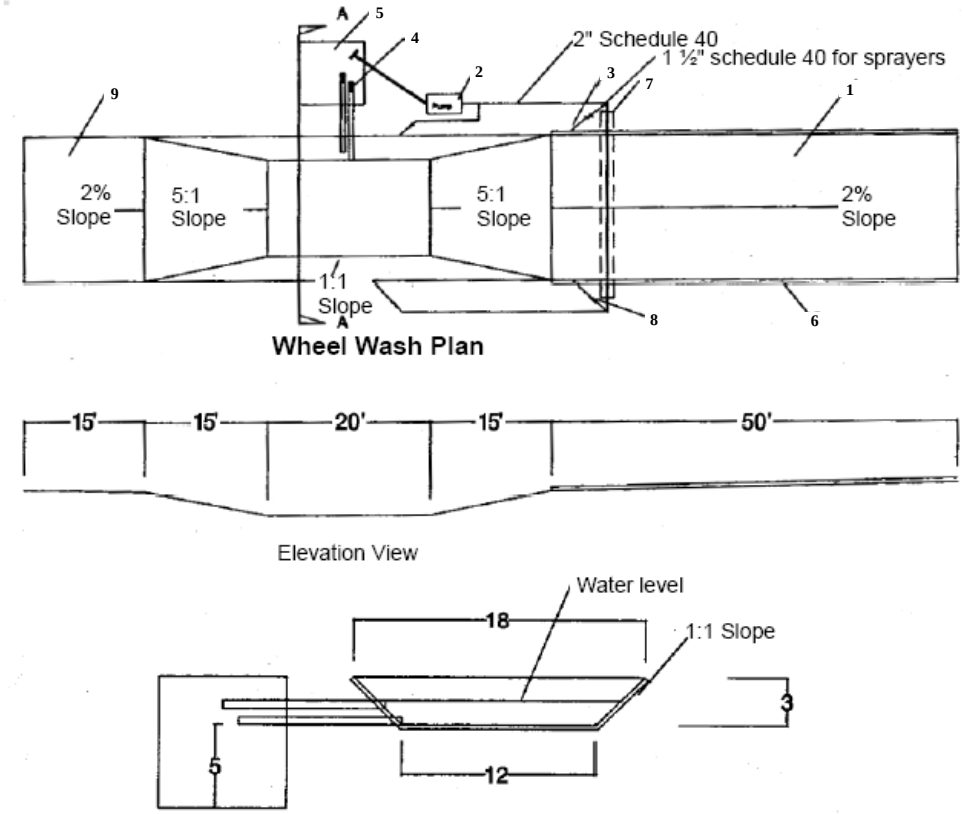

Notes:

1. Asphalt construction entrance 6 in. asphalt treated base (ATB).
2. 3-inch trash pump with floats on the suction hose.
3. Midpoint spray nozzles, if needed.
4. 6-inch sewer pipe with butterfly valves. Bottom one is a drain. Locate top pipe's invert 1 foot above bottom of wheel wash.
5. 8 foot x 8 foot sump with 5 feet of catch. Build so can be cleaned with trackhoe.
6. Asphalt curb on the low road side to direct water back to pond.
7. 6-inch sleeve under road.
8. Ball valves.
9. 15 foot. ATB apron to protect ground from splashing water.

Figure CN-101-A

BMP CN – 102
DEWATERING STRUCTURES

DESCRIPTION

Water which is pumped from a construction site usually contains a large amount of sediment. A dewatering structure is designed to remove the sediment before water is released off-site.

This practice includes several types of dewatering structures which have different applications dependent upon site conditions and types of operation. Other innovative techniques for accomplishing the same purpose are encouraged, but only after specific plans and details are submitted to and approved by the Big Cicero Creek Joint Drainage Board.

DESIGN CRITERIA

1. A dewatering structure must be sized (and operated) to allow pumped water to flow through the filtering device without overtopping the structure.
2. Material from any required excavation shall be stored in an area and protected in a manner that will prevent sediments from eroding and moving off-site.
3. An excavated basin (applicable to "Straw Bale/Silt Fence Pit") may be lined with filter fabric to help reduce scour and to prevent the inclusion of soil from within the structure.
4. Design criteria more specific to each particular dewatering device can be found in Figures CN-102-A through CN-102-C.
5. A dewatering structure may not be needed if there is a well-stabilized, vegetated area onsite to which water may be discharged. The area must be stabilized so that it can filter sediment and at the same time withstand the velocity of the discharged water without eroding. A minimum filtering length of 75 feet must be available in order for such a method to be feasible.
6. The filtering devices must be inspected frequently and repaired or replaced once the sediment build-up prevents the structure from functioning as designed.
7. The accumulated sediment which is removed from a dewatering device must be spread on-site and stabilized or disposed of at an approved disposal site as per approved plan.

<u>Portable Sediment Tank (see Figure CN102-A)</u>

- The structure may be constructed with steel drums, sturdy wood or other material suitable for handling the pressure exerted by the volume of water.
- Sediment tanks will have a minimum depth of 2 ft.
- The sediment tank shall be located for easy clean-out and disposal of the trapped sediment and to minimize the interference with construction activities.
- The following formula shall be used to determine the storage volume of the sediment tank:

  Pump discharge (gallons/min.) x 16 = cubic feet of storage required

- Once the water level nears the top of the tank, the pump must be shut off while the tank drains and additional capacity is made available.
- The tank shall be designed to allow for emergency flow over top of the tank. Clean-out of the tank is required once one-third of the original capacity is depleted due to sediment accumulation. The tank shall be clearly marked showing the clean-out point.

Filter Box (see Figure CN-102-B)

- The box selected should be made of steel, sturdy wood or other materials suitable to handle the pressure requirements imposed by the volume of water. Normally readily available 55 gallon drums welded top to bottom will suffice in most cases.
- Bottom of the box shall be made porous by drilling holes (or some other method).
- Coarse aggregate shall be placed over the holes at a minimum depth of 12 inches, metal "hardware" cloth may need to be placed between the aggregate and the holes if holes are drilled larger than the majority of the stone.
- As a result of the fast rate of flow of sediment-laden water through the aggregate, the effluent must be directed over a well-vegetated strip of at least 50 feet after leaving the base of the filter box.
- The box shall be sized as follows:

  Pump discharge (gallons/min.) x 16 = cubic feet of storage required

- Once the water level nears the top of the box, the pump must be shut off while the box drains and additional capacity is made available.
- The box shall be designed/constructed to allow for emergency flow over the top of this box.
- Clean-out of the box is required once one-third of the original capacity is depleted due to sediment accumulation. The tank shall be clearly marked showing the clean-out point.
- If the stone filter does become clogged with sediment so that it no longer adequately performs its function, the stones must be pulled away from the inlet, cleaned and replaced.
- Using a filter box only allows for minimal settling time for sediment particles; therefore, it should only be used when site conditions restrict the use of the other methods.

Straw Bale/Silt Fence Pit (see Figure CN-102-C)

- Measure shall consist of straw bales, silt fence, a stone outlet (a combination of riprap and aggregate) and a wet storage pit oriented as shown in Figure CN-102-C.
- The structure must have a capacity which is dictated by the following formula:

  Pump discharge (gallons/min.) x 16 = cubic feet of storage required

- In calculating the capacity, one should include the volume available from the floor of the excavation to the crest of the stone weir.
- In any case, the excavated area should be a minimum of 3 feet below the base of the perimeter measures (straw bales or silt fence).
- The perimeter measures must be installed as per the guidelines found in fact sheets associated with STRAW BALE BARRIER and SILT FENCE BMPs.
- Once the water level nears the crest of the stone weir (emergency overflow), the pump must be shut off while the structure drains down to the elevation of the wet storage.
- The wet storage pit may be dewatered only after a minimum of 6 hours of sediment settling time. This effluent should be pumped across a well vegetated area or through a silt fence prior to entering a watercourse.
- Once the wet storage area becomes filled to one-half of the, excavated depth, accumulated sediment shall be removed and properly disposed of.

- Once the device has been removed, ground contours will be returned to original condition.

REFERENCE

United States Army Corps of Engineers, Handbook for the Preparation of Storm Water Pollution Prevention Plans for Construction Activities, 1997 or later

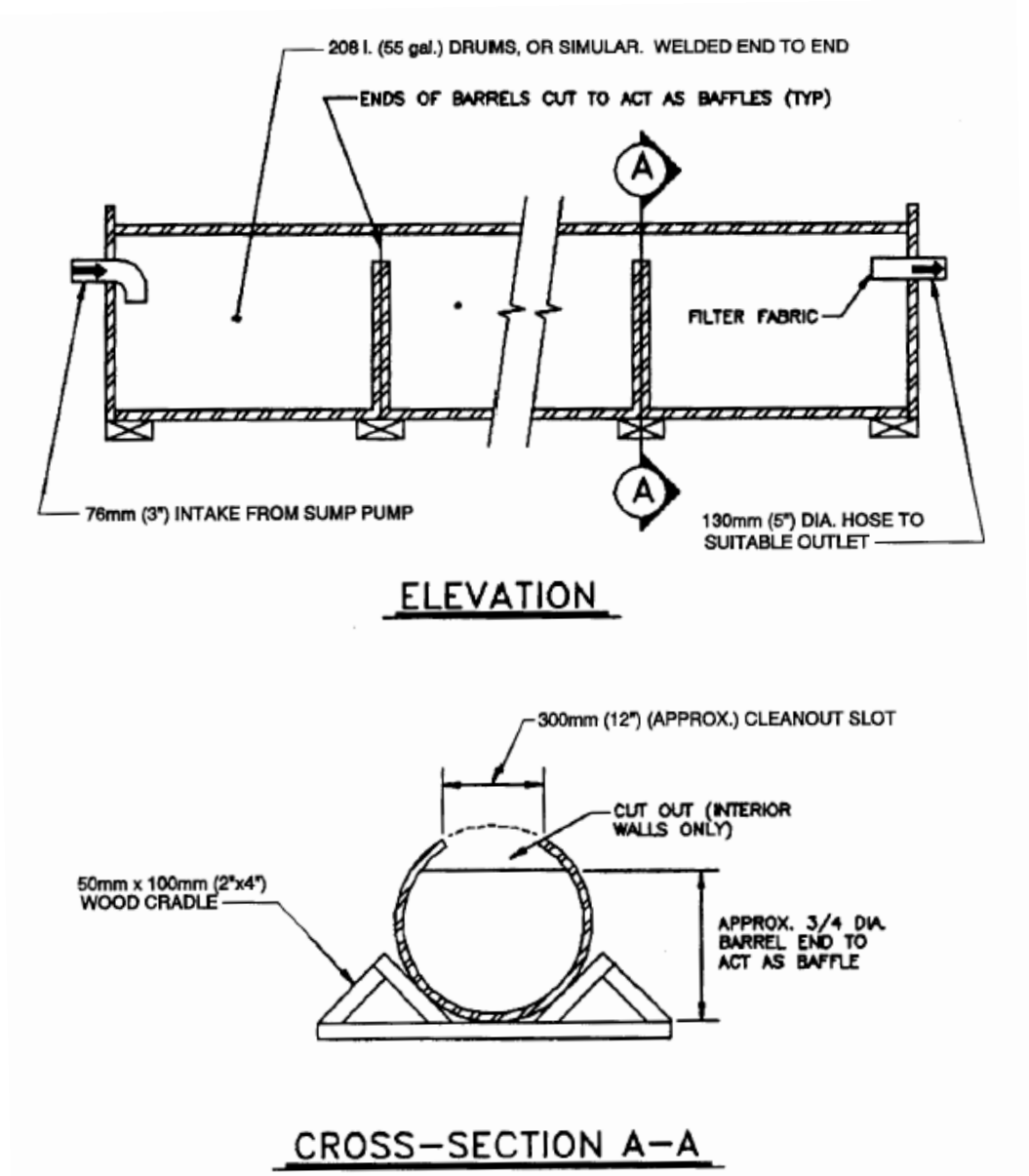

Figure CN-102-A
Portable Sediment Tank

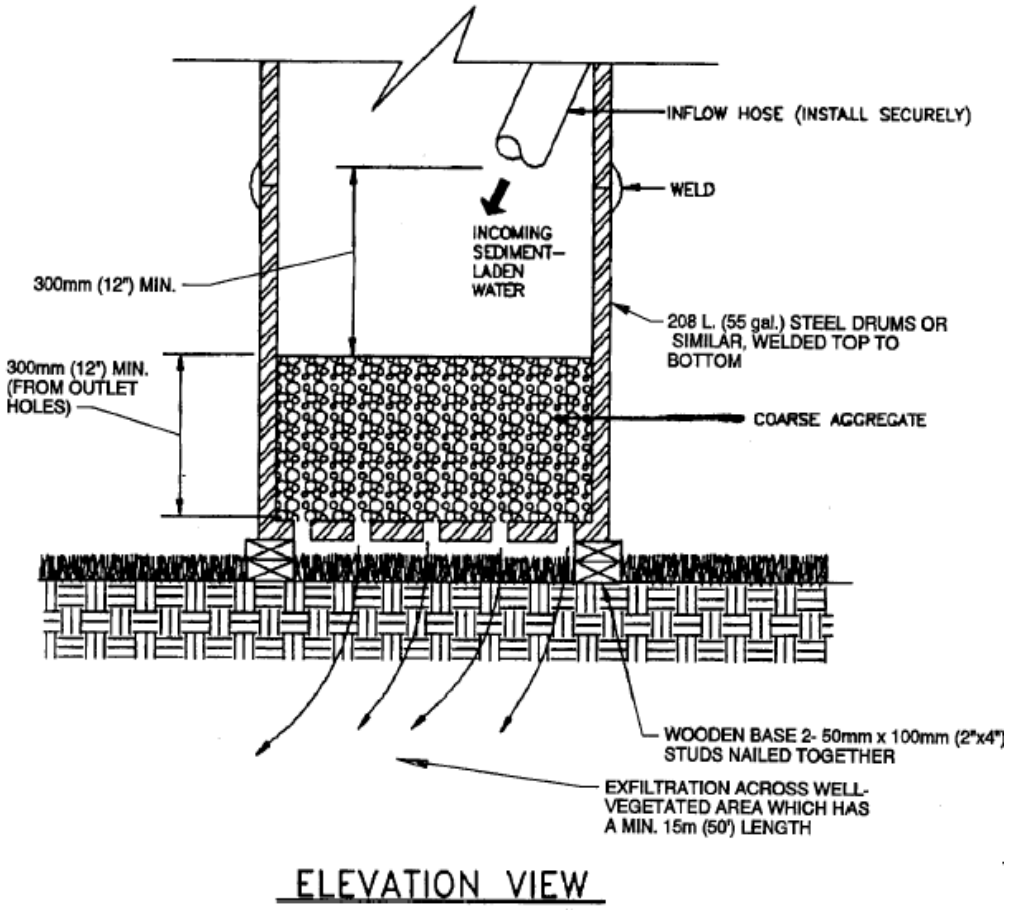

Figure CN-102-B
Filter Box

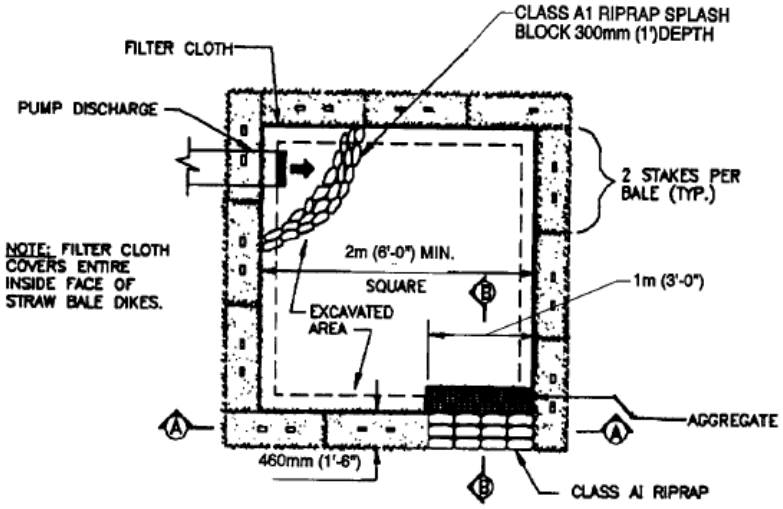

PLAN VIEW

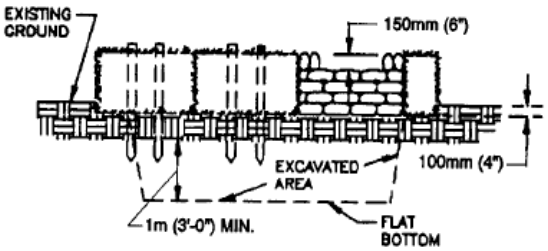

CROSS-SECTION A-A

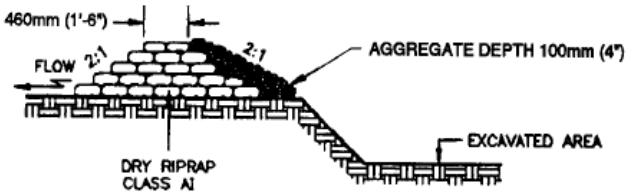

CROSS-SECTION B-B

Figure CN-102-C
Straw Bale/Silt Fence Pit

BMP CN – 103
SPILL PREVENTION AND CONTROL

DESCRIPTION

These procedures and practices are implemented to prevent and control spills in a manner that minimizes or prevents the discharge of spilled material to the drainage system or watercourses.

This best management practice (BMP) applies to all construction projects. Spill control procedures are implemented anytime chemicals and/or hazardous substances are stored. Substances may include, but are not limited to:

- Soil stabilizers/binders
- Dust Palliatives
- Herbicides
- Growth inhibitors
- Fertilizers
- Deicing/anti-icing chemicals
- Fuels
- Lubricants
- Other petroleum distillates

To the extent that the work can be accomplished safely, spills of oil, petroleum products, sanitary and septic wastes, and substances listed under 40 Code of Federal Regulations (CFR) parts 110, 117, and 302 shall be contained and cleaned up immediately.

LIMITATIONS

1. This BMP only applies to spills caused by the contractor.
2. Procedures and practices presented in this BMP are general. Contractor shall identify appropriate practices for the specific materials used or stored on-site in advance of their arrival at the site.

DESIGN CRITERIA

1. To the extent that it doesn't compromise clean up activities, spills shall be covered and protected from stormwater runoff during rainfall.
2. Spills shall not be buried or washed with water.
3. Used clean up materials, contaminated materials, and recovered spill material that is no longer suitable for the intended purpose shall be stored and disposed of in conformance with BMP CN-105: Hazardous Waste Management.
4. Water used for cleaning and decontamination shall not be allowed to enter storm drains or watercourses and shall be collected and disposed of in accordance with BMP CN-105: Hazardous Waste Management.
5. Water overflow or minor water spillage shall be contained and shall not be allowed to discharge into drainage facilities or watercourses.

6. Proper storage, clean-up and spill reporting instruction for hazardous materials stored or used on the project site shall be posted at all times in an open, conspicuous and accessible location.
7. Waste storage areas shall be kept clean, well organized and equipped with ample clean-up supplies as appropriate for the materials being stored. Perimeter controls, containment structures, covers and liners shall be repaired or replaced as needed to maintain proper function.
8. Verify weekly that spill control and clean up materials are located near material storage, unloading, and use areas.
9. Update spill prevention and control plans and stock appropriate clean-up materials whenever changes occur in the types of chemicals used or stored onsite.

Cleanup and Storage Procedures for Minor Spills

- Minor spills typically involve small quantities of oil, gasoline, paint, etc., which can be controlled by the first responder at the discovery of the spill.
- Use absorbent materials on small spills rather than hosing down or burying the spill.
- Remove the absorbent materials promptly and dispose of properly.
- The practice commonly followed for a minor spill is:
  - Contain the spread of the spill.
  - Recover spilled materials.
  - Clean the contaminated area and/or properly dispose of contaminated materials.

Cleanup and Storage Procedures for Semi-Significant Spills

- Semi-significant spills still can be controlled by the first responder along with the aid of other personnel such as laborers and the foreman, etc. This response may require the cessation of all other activities.
- Clean up spills immediately:
- Notify the project foreman immediately. The foreman shall notify the Emergency Management Agency's Hazardous Materials Response Team of the County in which the project is located.
- Contain spread of the spill.
- If the spill occurs on paved or impermeable surfaces, clean up using "dry" methods (absorbent materials, cat litter and/or rags). Contain the spill by encircling with absorbent materials and do not let the spill spread widely.
- If the spill occurs in dirt areas, immediately contain the spill by constructing an earthen dike. Dig up and properly dispose of contaminated soil.
- If the spill occurs during rain, cover spill with tarps or other material to prevent contaminating runoff.

Cleanup and Storage Procedures for Significant/Hazardous Spills

- For significant or hazardous spills that cannot be controlled by personnel in the immediate vicinity, notify the local emergency response by dialing 911. In addition to 911, the contractor will notify the proper county officials. It is the contractor's responsibility to have all emergency phone numbers at the construction site.

- For spills of federal reportable quantities, in conformance with the requirements in 40 CFR parts 110,119, and 302, the contractor shall notify the National Response Center at (800) 424-8802.
- Notification shall first be made by telephone and followed up with a written report.
- The services of a spills contractor or a Haz-Mat team shall be obtained immediately. Construction personnel shall not attempt to clean up the spill until the appropriate and qualified personnel have arrived at the job site.

REFERENCE

California Department of Transportation, Construction Site BMP Manual, 2000 or later

BMP CN – 104
SOLID WASTE MANAGEMENT

DESCRIPTION

Solid waste management procedures and practices are designed to minimize or eliminate the discharge of pollutants to the drainage system or to watercourses as a result of the creation, stockpiling, or removal of construction site wastes.

Solid waste management procedures and practices are implemented on all construction projects that generate solid wastes.

Solid wastes include but are not limited to:

1. Construction wastes including brick, mortar, timber, steel and metal scraps, sawdust, pipe and electrical cuttings, non-hazardous equipment parts, styrofoam and other materials used to transport and package construction materials.
2. Landscaping wastes, including vegetative material, plant containers, and packaging materials.
3. Litter, including food containers, beverage cans, coffee cups, paper bags, plastic wrappers, and smoking materials, including litter generated by the public.

LIMITATIONS

1. Temporary stockpiling of certain construction wastes may not necessitate stringent drainage related controls during the non-rainy season.

DESIGN CRITERIA

1. Dumpsters of sufficient size and number shall be provided to contain the solid waste generated by the project and properly serviced.
2. Littering on the project site shall be prohibited.
3. To prevent clogging of the storm drainage system, litter and debris removal from drainage grates, trash racks, and ditch lines shall be a priority.
4. Trash receptacles with lids shall be provided in the contractor's yard, field trailer areas, and at locations where workers congregate for lunch and break periods.
5. Construction debris and litter from work areas within the construction limits of the project site shall be collected and placed in watertight dumpsters at least weekly regardless of whether the litter was generated by the contractor, the public, or others. Collected litter and debris shall not be placed in or next to drain inlets, storm water drainage systems or watercourses.
6. Full dumpsters shall be removed from the project site and the contents shall be disposed of, off-site, in an appropriate manner.;
7. Litter stored in collection areas and containers shall be handled and disposed of by trash hauling contractors.
8. Construction debris and waste shall be removed from the site every two weeks.
9. Stormwater run-off shall be prevented from contacting stored solid waste through the use of berms, dikes, or other temporary diversion structures or through the use of measures to elevate waste from site surfaces.
10. Solid waste storage areas shall be located at least 50 ft from drainage facilities and watercourses and shall not be located in areas prone to flooding or ponding.

11. Except during fair weather, construction and landscaping waste not stored in watertight dumpsters shall be securely covered from wind and rain by covering the waste with tarps, plastic sheeting, or equivalent.
12. Dumpster washout on the project site is not allowed.
13. Notify trash hauling contractors that only watertight dumpsters are acceptable for use on-site.
14. Plan for additional containers during the demolition phase of construction.
15. Plan for more frequent pickup during the demolition phase of construction.
16. Construction waste shall be stored in a designated area. Access to the designated area shall either be well vegetated ground, a concrete or asphalt road or drive, or a gravel construction entrance, to avoid mud tracking by trash hauling contractors.
17. Segregate potentially hazardous waste from non-hazardous construction site waste.
18. Keep the site clean of litter debris.
19. Make sure that toxic liquid wastes (e.g., used oils, solvents, and paints) and chemicals (e.g., acids, pesticides, additives, curing compounds) are not disposed of in dumpsters designated for construction debris.
20. For disposal of hazardous waste, see BMP CN-105: Hazardous Waste Management. Have hazardous waste hauled to an appropriate disposal and/or recycling facility.
21. Salvage or recycle useful vegetation debris, packaging and/or surplus building materials when practical. For example, trees and shrubs from land clearing can be converted into wood chips, then used as mulch on graded areas. Wood pallets, cardboard boxes, and construction scraps can also be recycled.
22. Prohibit littering by employees, subcontractors, and visitors.
23. Wherever possible, minimize production of solid waste materials.

REFERENCE

California Department of Transportation, Construction Site BMP Manual, 2000 or later

BMP CN – 105
HAZARDOUS WASTE MANAGEMENT

DESCRIPTION

These are procedures and practices to minimize or eliminate the discharge of pollutants from construction site hazardous waste to the storm drain systems or to watercourses.

This best management practice (BMP) applies to all construction projects.

Hazardous waste management practices are implemented on construction projects that generate waste from the use of:

- Petroleum Products,
- Asphalt Products,
- Concrete Curing Compounds,
- Pesticides,
- Acids,
- Paints,
- Stains,
- Solvents,
- Wood Preservatives,
- Roofing Tar, or
- Any materials deemed a hazardous waste in 40 CFR Parts 110, 117, 261, or 302.

DESIGN CRITERIA

Storage Procedures

1. Wastes shall be stored in sealed containers constructed of a suitable material and shall be labeled as required by 49 CFR Parts 172,173, 178, and 179.
2. All hazardous waste shall be stored, transported, and disposed as required in 49 CFR 261-263.
3. Waste containers shall be stored in temporary containment facilities that shall comply with the following requirements:
   - Temporary containment facility shall provide for a spill containment volume able to contain precipitation from a 24-hour, 25 year storm event, plus the greater of 10% of the aggregate volume of all containers or 100% of the capacity of the largest tank within its boundary, whichever is greater.
   - Temporary containment facility shall be impervious to the materials stored there for a minimum contact time of 72 hours.
   - Temporary containment facilities shall be maintained free of accumulated rainwater and spills. In the event of spills or leaks accumulated rainwater and spills shall be placed into drums after each rainfall. These liquids shall be handled as a hazardous waste unless testing determines them to be non-hazardous. Non-hazardous liquids shall be sent to an approved disposal site.
   - Sufficient separation shall be provided between stored containers to allow for spill cleanup and emergency response access.
   - Incompatible materials, such as chlorine and ammonia, shall not be stored in the same temporary containment facility.

- Throughout the rainy season, temporary containment facilities shall be covered during non-working days, and prior to rain events. Covered facilities may include use of plastic tarps for small facilities or constructed roofs with overhangs. A storage facility having a solid cover and sides is preferred to a temporary tarp. Storage facilities shall be equipped with adequate ventilation.

4. Drums shall not be overfilled and wastes shall not be mixed.
5. Unless watertight, containers of dry waste shall be stored on pallets.
6. Paint brushes and equipment for water and oil based paints shall be cleaned within a contained area and shall not be allowed to contaminate site soils, watercourses or drainage systems. Waste paints, thinners, solvents, residues, and sludge that cannot be recycled or reused shall be disposed of as hazardous waste. When thoroughly dry, latex paint and paint cans, used brushes, rags, absorbent materials, and drop cloths shall be disposed of as solid waste.
7. Ensure that adequate hazardous waste storage volume is available.
8. Ensure that hazardous waste collection containers are conveniently located.
9. Designate hazardous waste storage areas on site away from storm drains or watercourses and away from moving vehicles and equipment to prevent accidental spills.
10. Minimize production or generation of hazardous materials and hazardous waste on the job site.
11. Use containment berms in fueling and maintenance areas and where the potential for spills is high.
12. Segregate potentially hazardous waste from non-hazardous construction site debris.
13. Keep liquid or semi-liquid hazardous waste in appropriate containers (closed drums or similar) and under cover.
14. Clearly label all hazardous waste containers with the waste being stored and the date of accumulation.
15. Place hazardous waste containers in secondary containment.
16. Do not allow potentially hazardous waste materials to accumulate on the ground.
17. Do not mix wastes.

<u>Disposal Procedures</u>

1. Waste shall be removed from the site within 90 days of being generated.
2. Waste shall be disposed of by a licensed hazardous waste transporter at an authorized and licensed disposal facility or recycling facility utilizing properly completed Uniform Hazardous Waste Manifest forms.
3. A certified laboratory shall sample waste and classify it to determine the appropriate disposal facility.
4. Make sure that toxic liquid wastes (e.g., used oils, solvents, and paints) and chemicals (e.g., acids, pesticides, additives, curing compounds) are not disposed of in dumpsters designated for solid waste construction debris.
5. Properly dispose of rainwater in secondary containment that may have mixed with hazardous waste.
6. Recycle any useful material such as used oil or water-based paint when practical.

<u>Maintenance and Inspection</u>

1. A foreman and/or construction supervisor shall monitor on-site hazardous waste storage and disposal procedures.
2. Waste storage areas shall be kept clean, well organized, and equipped with ample clean-up supplies as appropriate for the materials being stored.

3. Storage areas shall be inspected in conformance with the provisions in the contract documents.
4. Perimeter controls, containment structures, covers, and liners shall be repaired or replaced as needed to maintain proper function.
5. Hazardous spills shall be cleaned up and reported in conformance with the applicable Material Safety Data Sheet (MSDS) and the instructions posted at the project site.
6. The National Response Center, at (800) 424-8802, shall be notified of spills of Federal reportable quantities in conformance with the requirements in 40 CFR parts 110, 117, and 302.
7. Copy of the hazardous waste manifests shall be provided to the owner.

REFERENCE

California Department of Transportation, Construction Site BMP Manual, 2000 or later

CHAPTER 700: POST-CONSTRUCTION STORMWATER QUALITY MANAGEMENT

SECTION 701 INTRODUCTION

701.01
Purpose and Background

It is recognized that developed areas, as compared to undeveloped areas, generally have increased imperviousness, decreased infiltration rates, increased runoff rates, and increased concentrations of pollutants such as fertilizers, herbicides, greases, oil, salts and other pollutants. As new development and re-development continues within Big Cicero Creek Watershed jurisdictional area, measures must be taken to intercept and filter pollutants from stormwater runoff prior to reaching regional creeks, streams, and rivers. Through the use of appropriate Best Management Practices (BMPs), stormwater runoff will be filtered and harmful amounts of sediment, nutrients, and contaminants will be removed.

It is also recognized that another major source of pollution in many Indiana streams, including those within Big Cicero Creek Watershed jurisdictional area, is the streambank erosion associated with urbanizing watersheds. Stream channels develop their shape in response to the volume and rate of runoff that they receive from their contributing watersheds. Research has shown that in hydrologically stable watersheds, the stream flow responsible for most of the shaping of the channel (called the bankfull flow) occurs between every one to two years. When land is developed, the volume and rate of runoff from that land increases for these comparatively small flooding events that are not normally addressed by the detention practices and the stream channel will adapt by changing its shape. As the stream channel works to reach a new stable shape, excess erosion occurs. As new development and re-development continues within Big Cicero Creek Watershed jurisdictional area, measures must be taken to minimize the impact of such development or re-development on streambank erosion. Through the use of appropriate Best Management Practices (BMPs), the volume and rate of runoff for channel-forming flows will be reduced in an attempt to minimize increased streambank erosion in the receiving streams and channels.

This Chapter describes measures that need to be taken to satisfy Big Cicero Creek Joint Drainage Board Post-Construction Stormwater Management requirements, including Channel Protection and pollutant removal requirements.

Also, a set of Standard Details are available through the County Surveyor of the County where the project is located in that provides guidance on the design and installation of various hydraulic structures that may not have been covered in this chapter. Adherence to the noted standard details shall be required in addition to other requirements in this chapter. In case of discrepancy, the most restrictive requirement shall apply.

701.02
Abbreviations and Definitions

BMP	Best management practices can refer to structural measures (wetlands, ponds, sand filters, etc.) or non-structural measures (restrictive zoning, reduced impervious areas, etc.). BMPs are designed for the benefit of water quality and quantity. For the purposes of this chapter, BMPs refer to structural water quality BMPs, but in some circumstances, may include public education in cases where structural BMPs are not appropriate.
BMP owner	The owner of the BMP, typically the property owner. The BMP owner may also be the leasee of property in the case of long term leases of commercial or industrial zoned properties. The leasee is considered the BMP owner only if the lease specifically states that construction by the leasee must meet applicable local codes and regulations.
BOD	Biochemical oxygen demand

Contributing drainage area	Contributing drainage area refers to the total drainage area to a given point, including offsite drainage.
Effective Drainage Area	Effective drainage area refers to the drainage area from a specific site, excluding offsite drainage, where offsite drainage either does not exist or where offsite drainage bypasses the site through culverts or other means.
Floating Debris (Floatables)	Any solid waste that, due to its physical properties, will float on the surface of water. For the purpose of this manual, the term does not include naturally Occurring floatables such as leaves or tree limbs.
Impervious Area	Impervious areas are areas where the land surface has been altered to decrease the amount of rainwater infiltration. Impervious surfaces include paved roads, concrete driveways and rooftops.
Low Impact Development	LID is a land planning and engineering design approach with a goal of replicating the pre-development hydrologic regime of urban and developing watersheds. The primary goal of LID is to mimic a site's predevelopment hydrology by reducing the impervious surface, infiltrating, filtering, storing, evaporating, and detaining runoff close to its source.
Offline structure	Offline structures are BMPs that treat only the water quality volume (WQv). Flows exceeding the WQv bypass the structure and re-enter the watercourse below the BMP.
Redevelopment	Redevelopment means any construction, alteration, or improvement where structures are removed and/or replaced. Where the disturbance caused by redevelopment activities disturbs less than 0.5 acres, no water quality BMP plan shall be required. Staff has the discretion to exempt redevelopment activities disturbing up to 5% more area.
Stormwater Quality Management	A system of vegetative, structural, and other measures that reduce or eliminate pollutants that might otherwise be carried by surface runoff.
Total P	Total phosphorus
Total N	Total nitrogen.
TSS	Total suspended solids.
Treatment train	A treatment train consists of more than one BMP in series treating stormwater runoff. Such configurations are necessary when BMPs individually cannot meet the TSS reduction goal stated in the Ordinance.
Watershed	Watershed refers to the total drainage area contributing runoff to a single point.

SECTION 702 BASIC POLICIES AND PROCEDURES

702.01
Policy on Post-Construction Stormwater Quality Management

Big Cicero Creek Joint Drainage Board has determined that to prevent degradation of water quality in streams within its jurisdiction, measures must be taken to minimize the conveyance of pollutants to the receiving stream and to ensure that the channel banks of receiving streams are not subject to increased erosion as a result of development. Channel protection is typically achieved by matching the post-construction runoff volume and rate to the pre-settlement (prior to any historical land conversion by man) condition

for all runoff events up to the bankfull flow. The bankfull flow in most Indiana streams correlate with 1.5- to 2-year flood event flow. However, due to difficulties in determining the pre-settlement conditions, the net control of runoff resulting from a 1-year, 24-hour storm in proposed conditions (rather than the alternative method of determining increase in 2-year, 24-hour storm over pre-settlement conditions) is established as the Big Cicero Creek Watershed standard for channel protection.

The Big Cicero Creek Joint Drainage Board has also established a minimum standard that the measurement of the effectiveness of the control of post-construction stormwater runoff quality will be based on removal of floatables in stormwater runoff and treatment, to the maximum extent practicable, of all major pollutants of concern expected for the proposed land use and/or those identified in the Storm Water Pollution Prevention Plan for the site (including, if applicable, those pollutants found to be the cause of the receiving stream to be listed in IDEM 303(d) list) for up to the first inch of rainfall at the site. The above-noted "maximum extent practicable" criterion is subject to a minimum of 80% removal of Total Suspended Solids (TSS). These requirements are adopted as the basis of the Big Cicero Creek Joint Drainage Board's stormwater quality management program for all areas of the jurisdiction.

For the purpose of these Standards, the control of post-construction stormwater runoff quality is assumed satisfactory when the appropriate number of pre-approved structural BMPs, tiered in accordance to the total site disturbed area as shown below, are designed, installed, and operated in accordance with fact sheets provided in Appendix 702-1.

Disturbed Area	Post-Construction BMP Requirement*
0 to less than ½ acre	No BMP
At least ½ acre to less than 3 acres	At least 1 BMP
At least 3 acres	2 BMPs in series

* These BMPs are in addition to any pre-treatment that may be required for hot spots.

As noted above, a combination of at least two BMPs in series (each sized to handle water quality volume) is required for sites with a disturbed area of at least 3 acres, with the first BMP acting as a pretreatment measure to reduce pollutant concentrations within the downstream, or secondary, BMP. A dual BMP provision provides a failsafe benefit should adverse conditions result in undue clogging or other potential BMP impairment. Only one of the required BMPs can be a proprietary Water Quality Device.

Requirements of the Ordinance and this Technical Standards Manual with regards to the channel protection and water quality protection can be satisfied through a variety of methods that can be broadly categorized under two general approaches:

1. Conventional Approach
2. Low Impact Development (LID) Approach

This chapter of the manual establishes minimum standards for the selection and design of post-construction water quality and channel protection BMPs. The information provided in this chapter establishes performance criteria for stormwater quality management and procedures to be followed when preparing a BMP plan for compliance. Post-construction BMPs must be sized to treat the channel protection volume (CPv), water quality volume (WQv), and for flow-through BMPs the water quality discharge rate (Qwq).

702.02
Applicability and Exemptions

In addition to the requirements of Chapter 600, the stormwater pollution prevention plan, which is to be submitted to County Surveyor of the County where the project is located in as part of the stormwater management permit application, must also include post-

construction stormwater quality measures. These measures are incorporated as a permanent feature into the site plan and are left in place following completion of construction activities to continuously treat stormwater runoff from the stabilized site. Any project located within the Big Cicero Creek Joint Drainage Board jurisdictional area meeting the applicability threshold in the Stormwater Ordinance is subject to the requirements of this Chapter.

The requirements under this chapter do not apply to the following activities:

A. agricultural land disturbing activities; or
B. timber harvesting activities; or
C. construction activities associated with a single family residential dwelling disturbing less than 5 acres, when the dwelling is not part of a larger common plan of development or sale; or
D. single family residential developments consisting of four or less lots; or
E. a single-family residential strip development where the developer offers for sale or lease without land improvements and the project is not part of a larger common plan of development of sale; or
F. individual building lots within a larger permitted project.

The requirements under this chapter do not apply to the following activities, provided other applicable State permits contain provisions requiring immediate implementation of soil erosion control measures:

A. Landfills that have been issued a certification of closure under 329 IAC 10.
B. Coal mining activities permitted under IC 14-34.
C. Municipal solid waste landfills that are accepting waste pursuant to a permit issued by the Indiana Department of Environmental Management under 329 IAC 10 that contains equivalent stormwater requirements, including the expansion of landfill boundaries and construction of new cells either within or outside the original solid waste permit boundary.

It will be the responsibility of the project site owner to complete a stormwater permit application and ensure that a sufficient construction plan is completed and submitted to the County Surveyor of the County where the project is located in in accordance with Chapter 100. It will be the responsibility of the project site owner to ensure proper construction and installation of all stormwater BMPs (especially, the protection of the post-construction BMPs during construction phase) in compliance with all applicable ordinances and this Standards and with the approved stormwater management permit, and to notify the County Surveyor of the County where the project is located in with a Notice of Termination letter upon completion of the project and stabilization of the site. However, all eventual property owners of stormwater quality facilities meeting the applicability requirements must comply with the requirements of this Chapter.

702.03
Pollutants of
Concern

There are three major sources of pollutants for a stabilized construction site:

- Deposition of atmospheric material (including wind-eroded material and dust)
- General urban pollution (thermal pollution, litter)
- Pollutants associated with specific land uses

It should be noted that some pollutants accumulate on impervious surfaces. This accumulated material is then subject to being washed into watercourses during storm events. It is for this reason that fish kills often occur during a rain event with a substantial prior rainless period. This is also the reason that the most hazardous driving conditions are realized after the initial onset of a storm event, when deposited oil has not yet washed into adjacent conveyance systems.

Post-construction pollutants of concern include:

- **Sediment** is the major pollutant of concern during active construction. Natural erosion processes are accelerated at a project site by the construction process for a number of reasons, including the loss of surface vegetation and compaction damage to the soil structure itself, resulting in reduced infiltration and increased surface runoff. After the construction is completed, other chemicals that are released to surface waters from industrial and municipal discharges and polluted runoff from urban and agricultural areas continue to accumulate to harmful levels in sediments.

- **Toxic chemicals** from illegal dumping and poor storage and handling of materials. Industrial sites pose the most highly variable source of this pollution due to the dependency of the specific process to the resulting pollution amounts and constituents. As during construction, these chemicals can pose acute (short-term) or chronic (long-term) risk to aquatic life, wildlife and the general public.

- **Bacteria** from illicit sanitary connections to storm sewer systems, combined sewers, leaking septic systems, wildlife and domestic animal waste. Bacteria pathogens pose a direct health risk to humans and aquatic life.

- **Nutrients** can be released from leaking septic systems or applied in the form of fertilizers. Golf courses, manicured landscapes and agricultural sources are the primary land uses associated with excess fertilization. Excessive nutrients in the local ecosystem are the source of algal blooms in ponds and lakes. These excessive nutrients also lead to acceleration of the eutrofication process, reducing the usable lifespan of these water bodies. Nitrogen and phosphorous are the primary nutrients of concern.

- **Oxygen demand** can be impacted by chemicals transported on sediment, by nutrients, and other pollutants (such as toxic chemicals). Reduced levels of oxygen impair or destroy aquatic life.

- **Oils and hydrocarbons** accumulate in streets from vehicles. They can also be associated with fueling stations and illicit dumping activities. Oils and hydrocarbons pose health risk to both aquatic and human health.

- **Litter, including floatables,** can result in a threat to aquatic life. The aesthetic impact can also reduce the quality of recreational use.

- **Metals** can be associated with vehicular activity (including certain brake dusts), buildings, construction material storage, and industrial activities. Metals are often toxic to aquatic life and threaten human health.

- **Chlorides** (salts) are historically associated with deicing activities. Chlorides are toxic to native aquatic life (verses saltwater aquatic life). Communities should consider a combination or cinders or sand to replace or supplement their deicing activities with chlorides. In addition, chloride stockpiles should remain covered.

- **Thermal effects** can be introduced by the removal of shade provided by riparian trees, as well as impervious channel linings, such as concrete, which release stored heat to water passing over them. Other sources of elevated temperature include effluent from power plant and industrial activities. Thermal pollution can threaten aquatic habitat, including fish species and beneficial water insects. Of particular concern are salmonoid streams, due to the effect of thermal pollution on spawning for this particular species.

Direct water quality sampling is not generally required at this time under the Phase II provisions. However, water quality characteristics are strongly tied to land use. For the purpose of these standards, all proposed developments and re-developments shall be assumed to involve increased levels of floatables, TSS, TP, TN, and metals. Additional pollutants may also be expected at certain types of developments and specific sites, as identified in the Storm Water Pollution Prevention Plan for the site (including, if applicable, those pollutants found to be the cause of the receiving stream to be listed in IDEM 303(d) list).

702.04
Conventional
Approach Procedures

The following procedures shall be followed according to the Conventional approach:

Step 1: <u>Provide BMPs to address Channel Protection Volume</u>
In a conventional approach, the receiving channel is protected through extended detention of the 1-year, 24-hour storm event on entire site (disturbed and undisturbed) tributary to each outlet. Both wet and dry extended detention may be used so long as only 10% of the maximum stored volume is left in the basin after 36 hours from maximum storage time and no more than 40% of the maximum stored volume is released within the first 12 hours. To ensure that adequate detention volume is available within the facility over the years, the facility should be designed for long-term (a minimum of 50 years) sediment accumulation. If long-term sediment accumulation cannot be adequately provided for in the pond, or if the pond is intended to provide sediment control during the construction phase of the project, forebays near inlets can be included to help manage sediment accumulation.

Since, by design, 90% of the original volume will be available within 48 hours of start of each storm event (assumed to be about 36 hours from when the Channel Protection pool is full), the volume in the pond associated with the channel protection (CPv) may be assumed empty for the purpose of peak flow detention analysis discussed in Chapter 300. In addition, the volume provided for channel protection would also satisfy the water quality volume (WQv) requirement provided that the facility meets the design criteria in the fact sheet and additional pre-treatment and/or wetland fringe can be provided to assure the treatment benchmarks noted in Section 702.01 of these Standards are met.

The methodology for calculating the Channel Protection Volume (CPv) for each of site's final outlets using computer models or manual calculation is as follows:

- Computer Model: Use acceptable computer models (listed in Chapter 200) to determine the total runoff volume for the site contributing to each site's outlet, utilizing 1-year, 24 hour rainfall depth with Soil Conservation Service (SCS) type 2 storm distribution, drainage area, and the composite CN calculated for the site, according to the Soil Conservation Service (SCS) CN loss method along with SCS unitless hydrograph methodology.
- Manual Calculation: If calculating manually, use the following formula:
  - Runoff Volume (ft3) = Qv x 1/12 x A

    Where

    A = total post-construction site area contributory to each outlet (ft^2)

    Qv = Runoff Depth (in) = $(P – 0.2S)^2/(P + 0.8S)$

    P = 1-Year, 24 Hr Rainfall (in)

    S = (1000/CN) – 10

Step 2: <u>Provide BMPs to address Water Quality Management</u>
When the channel protection volume is controlled with BMPs that also meet the stormwater quality performance criteria noted in Section 702.01, often no additional calculation or BMP implementation is necessary. If the channel protection volume is not controlled through practices that meet the stormwater quality performance criteria in Section 702.01, additional BMPs will be required.

Big Cicero Creek Joint Drainage Board has designated a number of pre-approved structural BMP methods (listed in Table 702-1 for Conventional Approach and Tables 702-4 through 702-6 for LID Approach) to be used alone or in combination to achieve the stormwater quality performance criteria noted in Section 702.01 of these Standards for runoff generated from up to first inch of rainfall on the entire site (disturbed and undisturbed) tributary to each outlet. Details regarding the applicability and design of these pre-approved BMPs, including the effectiveness of these BMPs in treating pollutants of concern (including, if applicable, those pollutants found to be the cause of the receiving stream to be listed in IDEM 303(d) list), are contained within fact sheets presented in **Appendix 702-1**. Additional information on recommended plant lists and recommended materials used for construction of stormwater BMPs are provided in **Appendix 702-2** and **Appendix 702-3**, respectively.

Innovative BMPs, including but not limited to, BMPs not previously accepted by the County Surveyor of the County where the project is located in must be certified by a Professional Engineer licensed in State of Indiana and approved through the County Surveyor of the County where the project is located in. ASTM standard methods must be followed when verifying performance of new measures. New BMPs, individually or in combination, must meet the performance criteria noted in Section 702.01 of these Standards, including the capture and removal of floatables. All innovative BMPs must have a low to medium maintenance requirement to be considered by the County Surveyor of the County where the project is located in. Testing to establish the pollutant removal rate must be conducted by an independent testing facility, not the BMP manufacturer. The accepted design flow rate for a Water Quality Device shall be the flow value at which the claimed removal rate for TSS is equaled or exceeded based on the unit's efficiency curve (flow rate versus removal rate graph). In rare cases where structural BMPs may not be appropriate or practical, public education may be substituted in lieu of a structural BMP. This option will be at the discretion of the plan reviewer.

Structural Water Quality treatment is achieved by treating the first inch of rainfall, either through retention/detention BMPs or by Flow-through BMPs. Detention/Retention BMPs impound (pond) the runoff to be treated (Water Quality Volume: WQv), while flow-through BMPs treat the runoff through some form of filtration process (Water Quality Treatment Rate: Qwq). The following methods are used as part of Conventional Approach to calculate WQv and Qwq:

<u>Water Quality Volume (WQv)</u>

Water Quality Detention BMPs must be designed to store the water quality volume for treatment. The water quality volume, WQv, is the storage needed to capture and treat the runoff from the first one inch of rainfall. The water quality volume is equivalent to one inch of rainfall multiplied by the volumetric runoff coefficient (Rv) multiplied by the site area.

A calculation methodology similar to that described for the channel protection volume may be utilized, except that the rainfall depth (P) will be equal to 1, instead of the 1-year, 24-hour depth.

Alternatively, a simpler methodology may be used for calculation of WQv as follows:

$$WQv = (P)\ (Rv)\ (A)/12$$

where:
WQv = water quality volume for each site's outlet (acre-feet)
P = 1 (inches)
Rv = volumetric runoff coefficient
A = total contributing area to each site's outlet in acres

The volumetric runoff coefficient is a measure of imperviousness for the contributing area, and is calculated as:

$$\mathbf{Rv = 0.05 + 0.009(I)}$$

Where:
I is the percent impervious cover

For example, a proposed commercial site will be designed to drain to three different outlets, with the following drainage areas and impervious percentages:

Subarea ID	On-site Contributing Area (acres)	Impervious Area %	Off-Site Contributing Area (acres)
A	7.5	80	0.0
B	4.3	75	0.0
C	6.0	77	0.0

Calculating the volumetric runoff coefficient for subareas A, B and C yields:

Rv (subarea A) = 0.05+0.009(80) = 0.77
Rv (subarea B) = 0.05+0.009(75) = 0.73
Rv (subarea C) = 0.05+0.009(77) = 0.74

The water quality volumes for these three areas are then calculated as:

WQv (subarea A) = (1")(Rv)(A)/12=0.77(7.5)/12=0.48 acre-feet
WQv (subarea B) = 0.73(4.3)/12=0.26 acre-feet
WQv (subarea C) = 0.74(6.0)/12=0.37 acre-feet

Note that this example assumed no offsite sources of discharge through the channel protection detention/retention BMPs. If there are significant sources of off-site runoff, the designer has the option of diverting off-site runoff around the on-site systems, or the detention BMP should be sized to treat the water quality volume for the entire contributing area, including off-site sources.

Water Quality Treatment Rate (Qwq)

Flow-through BMPs are designed to treat runoff at a peak design flow rate through the system. Examples of flow through BMPs include catch basin inserts, sand filters, and grassed channels. Another flow through BMP which is gaining popularity is a hydrodynamic separator or other similar type of device discussed in the Water Quality Devices Fact Sheet (Appendix 702-1). Hydrodynamic separators are proprietary, and usually include an oil-water separation component. Hydrodynamic separators (i.e. Gravity or Manufactured Stormwater Quality Units) located on the City of Indianapolis Stormwater Quality Unit Selection Guide will be accepted when installed off-line. New units not on this list will be accepted on a case by case basis with 3rd party testing data and specifications required as well as a written narrative explaining the water quality benefits of the BMP. Runoff rate calculations for each site should be completed according to the instructions in these Standards for the one inch rainfall event. Once a runoff rate has been determined, a unit with a corresponding acceptable treatment rate can be selected from the Indianapolis selection guide. For treatment device O&M manuals, applicants shall at a minimum follow the standard treatment unit checklists and notes as provided in the selection guide unless these conflict with other applicable County standards. In the event that the Indianapolis selection guide no longer exists, applicants shall provide independent, third party documentation to prove that a treatment

unit meets TSS removal to the highest extent practicable for a particle size of 50-125 microns and/or the OK-110 particle size distribution. If the City of Indianapolis selection guide is not used and for innovative BMPs, the accepted design flow rate for a Water Quality Device shall be the flow value at which the claimed removal rate for TSS is equaled or exceeded based on the unit's efficiency curve (flow rate versus removal rate graph).

The following procedure should be used to estimate peak discharges for flow through BMPs (adopted from Maryland, 2000). It relies on the volume of runoff computed using the Small Storm Hydrology Method (Pitt, 1994) and utilizes the NRCS, TR-55 Method.

Using the WQv methodology, a corresponding Curve Number (CNwq) is computed utilizing the following equation:

$$CNwq = \frac{1000}{\left[10 + 5P + 10Qa - 10\sqrt{Qa^2 + 1.25QaP}\right]}$$

where:
CNwq = curve number for water quality storm event
P = 1" (rainfall for water quality storm event)
Qa = runoff volume, in inches = 1"×Rv = Rv (inches)
Rv=volumetric runoff coefficient (see previous section)

Due to the complexity of the above equation, the water quality curve number is represented as a function of percent imperviousness in **Exhibit 701-1**.

The water quality curve number, CNwq, is then used in conjunction with the standard calculated time-of-concentration, tc, and drainage area as the basis input for TR-55 calculations. Using the SCS Type II distribution for 1 inch of rainfall in 24-hours, the water quality treatment rate, Qwq, can then be calculated.

Note that a single BMP measure may not be adequate to achieve the water quality requirements (as noted above) for a project. It is for this reason that a "treatment train", a number of BMPs in series, is often required for a project. The pollutant removal efficiency of a number of BMPs in series may be determined from the following formula:

$$Eseries = 1 - (1-E_1)(1-E_2)(1-E_3)\ldots$$

where,
Eseries = Removal Efficiency of the BMP series combined (in decimal form)
E_1, E_2, E_3,… = Removal Efficiency of Units 1, 2,3, …, respectively (in decimal form).

702.05
LID Stormwater Management Approach

Low impact development (LID) stormwater management design approaches are fundamentally different from conventional design approaches and challenge traditional thinking regarding development standards, watershed protection, and public participation. LID combines fundamental hydrologic concepts with many of today's common stormwater strategies, practices and techniques to reshape development patterns in a way that maintains natural watershed hydrologic functions. When a county or community has a stormwater user fee system based on imperviousness, the utilization of LID concepts also often results in a smaller stormwater user fee for non-residential lots. The five principles of LID are:

a) Conservation of existing natural and topographic features;
b) Minimization of land clearing and impervious surfaces;
c) Maintain or lengthen the pre-developed time of concentration;
d) Installation of integrated structural best management practices; and
e) Use of pollution prevention measures and practices.

Several methods for achieving the above requirements and principals are outlined below. In addition to methods described in this Standards Manual, several readily available references provide details on incorporating LID practices into site development. One of the most recent, comprehensive resources for incorporating LID practices into site development design is "Low Impact Development Manual for Michigan: A Design Guide for Implementers and Reviewers" available online at www.semcog.org/LowImpactDevelopment.aspx. The noted resource was used extensively for the development of LID section in this Standards Manual.

The following steps shall be followed for the LID approach:

Step 1: **Minimize Disturbed Areas and Protect Sensitive Areas**

- Map sensitive areas such as waterbodies, floodplains, and natural flow paths. Identify hydrologic soil types on the maps. Show elevations and identify critical slopes of 15 percent to 25 percent and above 25 percent. Show areas of known contamination. Also show existing structures and infrastructure.
- Determine the total area of impervious surface existing prior to development.
- Note the seasonal high groundwater level.
- Designate sensitive areas that are proposed to be protected as part of the proposed layout.
- Lay out the proposed development, minimizing disturbance and avoiding the sensitive areas.
- Utilize the non-structural BMPs listed in **Table 702-2** to properly protect sensitive areas so they maintain their pre-development state and runoff characteristics. Fact sheets for non-structural BMPs are provided in Appendix 702-1.
- As shown in Table 702-2, when using the LID Approach, any area that is set aside and protected as described in those BMPs may be subtracted from site development area for purposes of determining Channel Protection Volume calculations and water quality volume/rate calculations.
- In addition, for determining the 10-year and 100-year runoff and peak discharges, the CN associated with the original, pre-development soil groups (instead of the normal requirement of assigning the post-development CN according to the next lower infiltration soil group) may be used for these areas (see **Table 702-8**).
- The runoff reduction recognition only works with designs based on the Curve Number or CN method of analysis utilizing non-composite CN determination methods.

Step 2: **Restore Disturbed Areas**

- For the LID Approach, runoff reduction recognitions are used in the design process to emphasize the use of BMPs that, when applied, restore/alter the disturbed area in a way that reduces the volume of runoff from that area.
- Runoff reduction recognition is provided for the five BMPs listed in **Table 702-3** because they enhance the response of a piece of land to a storm event rather than treat the runoff that is generated. These BMPs are encouraged because they are relatively easy to implement over structural controls, require little if any maintenance, and the land they are applied to remains open to other uses.

- Runoff reduction recognition is applied by reducing the default CN value so that the amount of runoff generated from an event is reduced.
- The runoff reduction recognition only works with designs based on the Curve Number or CN method of analysis utilizing non-composite CN determination methods.
- Fact sheets for these BMPs are provided in Appendix 702-1.

Step 3: **Minimize Imperviousness**

- The BMPs listed in **Table 702-4** are designed to reduce the volume of runoff from hard surfaces such as roads, sidewalks, parking areas, roofs, etc. For the LID Approach, runoff reduction recognition is used to encourage these practices and recognize their runoff reduction impacts. Fact Sheets for these BMPs are provided in Appendix 702-1.
- Although imperviousness reduction BMPs are encouraged throughout any new development or re-development, the runoff reduction recognitions may only be considered where the following conditions are met:
  - The BMP must be in the common areas and covered by an easement or other agreement that assigns responsibility for its maintenance.
  - The BMP must be covered by a maintenance plan and agreement with assurances for the long-term availability of maintenance funds (such as funds held in a permanent escrow account) provided to the County Surveyor of the County where the project is located in in a form acceptable to the County Surveyor of the County where the project is located in.

Step 4: **Calculate the amount of volume control needed for channel protection**

- Determine the 1-year 24-hour rainfall from Table 201-3 in Chapter 200,
- Delineate subbasins in a manner that, at a minimum and to the extent possible, the pervious and impervious surfaces are in different subbasins
- Determine the disturbed drainage area for each subbasin by subtracting the protected area determined in Step 1 from total contributing drainage area.
- Assign CN to each cover type and land use, assigning "credited CN" for areas treated in Steps 2 and 3 instead of normal post-development CN that is determined based on the proposed land use and the next less infiltrating underlying soil group, when applicable. Published pre-determined weighted CN values shall not be utilized for LID Approach. This applies regardless of whether manual methods or computer modeling techniques are used.
- Determine the total post-development 1-year, 24-hour runoff volume for the entire site's disturbed areas through the use of acceptable computer models or manually as specified below. This is the net Channel Protection volume needing to be permanently removed by appropriate structural BMPs.
  - Computer Model: Use acceptable computer models (listed in Chapter 200) to determine the total runoff volume for the site contributing to each site's final outlet, utilizing 1-year, 24 hour rainfall depth with Soil Conservation Service (SCS) type 2 storm distribution, drainage area, and CN determined above, according to the Soil Conservation Service (SCS) CN loss method along with SCS unitless hydrograph methodology.
  - Manual Calculation: If calculating manually, use the following formula:
    - Runoff Volume (ft3) for each post-construction cover type contributing to each outlet = Qv x 1/12 x A

      Where

      A = disturbed area of the particular cover type (ft^2)

      Qv = Runoff Depth (in) = $(P - 0.2S)^2/(P + 0.8S)$

      P = 1-Year, 24 Hr Rainfall (in)

$S = (1000/CN) – 10$

- Sum the individual volumes to obtain the total post-development runoff volume for area to be managed.

Step 5: <u>Provide Distributed Volume Reduction/Infiltration Practices</u>

- **Table 702-5** includes a list of the structural BMPs from potential BMPs that provide volume removal. Select and design structural BMPs that provide volume control to meet, when combined, the total net channel protection volume determined in Step 4. Fact sheets for these and other relevant post-construction structural BMPs are provided in Appendix 702-1.
- The volume reduction BMPs may not be successfully implemented in every situation. See "Applicability and Limitation" discussions in each fact sheet. In order to qualify for volume reduction recognition, the BMPs must meet all the following:
    - Be in the common areas and covered by an easement or other agreement that assigns responsibility for its maintenance.
    - Be covered by a maintenance plan and agreement with assurances for the long-term availability of maintenance funds (such as funds held in a permanent escrow account) provided to the County Surveyor of the County where the project is located in in a form acceptable to the County Surveyor of the County where the project is located in.
    - Be constructed on undisturbed A or well-drained B soils (B/D soils do not qualify) or amended soil with underdrains, as needed. If underdrains are used, the bottom elevations of the underdrains should be above the seasonal high water table. Soil infiltration testing protocol, provided in **Appendix 702-4**, must be followed to determine if infiltration BMPs are suitable at a site and to obtain the required data (such as soil conditions and depth of seasonal high water table) for infiltration design.
    - Be constructed in an area where the depth of seasonal high water table and any bedrock is more than a minimum of 2 feet (4 is desirable) from ground elevation.
    - Be constructed in a manner that any infiltration practices are adequately separated from basement foundations (50 feet up gradient, 10 feet down gradient), on-site septic systems/drainfields (100 feet), wells (50 feet), and other building elements that could be affected by infiltration systems.
    - Be constructed outside of any 1-year (Zone 1) or 5–year (Zone 2) time of travel areas to public water supply wells, as defined by a modeled wellfield delineation performed in compliance with 327 IAC 8-4.1. When such delineation is not available, said practice must be at least 3,000 feet from the nearest public water supply well (unless applicant can demonstrate that the proposed practice will have no impacts on the water quality of the water supply well).
    - Final construction should be completed after the contributing drainage area has been stabilized.
    - Must contain erosion-protection features at the inflow to prevent scouring
    - Must contain a maintenance area near the inlet to collect large debris. Examples include small concrete aprons, catch basin inserts, or similar durable maintenance point.
- When the LID Approach is being pursued in all other aspects of the design but site limitations would not allow permanent volume reduction practices, channel protection volume should, at a minimum and as site limitations would allow, be accommodated through distributed storage solutions noted in Table 702-5 that also include underdrains as described in the appropriate

Fact Sheets so that at a minimum they can act as both extended detention and filtration practices.

- **Calculation Methods for Recognizing Impacts of Distributed Storage on Overall Site's Peak Flow Detention Requirements:** when all the stated conditions above is met for volume-reduction distributed storage practices noted in Table 702-5, total volume provided for channel protection within distributed storage units (not to exceed the required channel protection volume calculated in Step 4) may be credited towards the site's detention requirements for peak (100-year) flow control (see Table 702-8). Several methods are available to account for the noted runoff reduction recognition. A few common methods are listed below (other methods not noted below may also be used as appropriate):
    - Method 1: Assume that the provided Channel Protection Volume in the distributed storage units (not to exceed the required channel protection volume calculated in Step 4) will be stored below the detention pond's normal pool (below the lowest outlet). To simulate this condition, all the volumes in the elevation-storage table are increased by the provided Channel Protection Volume, an additional table entry is made as the first row with an artificial lower elevation and with zero for storage, and the reservoir's starting elevation is set at the noted artificial elevation.
    - Method 2: Utilize the "Divert" option of the hydrologic model used to compute the inflow to the pond to simulate the diversion (abstraction) of the provided Channel Protection Volume (not to exceed the required channel protection volume calculated in Step 5) from the detention pond inflow before the remaining flood hydrograph is routed through the detention system. To accomplish this, the model should have capability to simulate diversion with a volume cap option.
    - Method 3: Explicitly model the distributed storage features as a network of storage and conveyance units through the use of computer programs that can correctly model interconnected storage.

Step 6: <u>Provide Additional (as-needed) Extended Detention Practices</u>

- When the LID Approach is being pursued in all other aspects of the design but site limitations would not allow adequate distributed volume reduction practices noted in Step 5 (with or without underdrain), then a constructed wetland or a wet-bottom extended detention facility along with incorporation of an appropriate wetland fringe should be utilized as listed in **Table 702-6**. If designed properly, such a facility can be incorporated into a multi-purpose facility to control channel protection volume, water quality volume, and 100-year peak flow rate. Note that since by design conditions of a wet-bottom extended detention facility, 90% of the original volume will be available within 48 hours of each storm event (i.e., a maximum of 36 hours from when the channel protection pool is full), the volume in the pond associated with the channel protection may be assumed empty for the purpose of peak flow detention analysis discussed in Chapter 300 of these Standards (see **Table 702-8**).

Step 7: <u>Determine Water Quality Volume and Provide, As-needed, Additional Water Quality BMPs</u>

- The expected treatment of many BMPs applied to LID designs is based on removing solids. Many pollutants are attached to solids or are removed by similar treatment mechanisms. Therefore, removing solids can act as a surrogate for the expected removal of other particulate pollutants. Often multiple BMPs will be necessary to remove successively smaller particle sizes to achieve the highest level of treatment.

- When the channel protection volume is controlled with BMPs that also meet the stormwater quality performance criteria in Section 702.01, often no additional calculation or BMP implementation is necessary. If the channel protection volume is not controlled through practices that also meet the stormwater quality performance criteria in Section 702.01, calculate the water quality volume that provides for the treatment of the first inch of rainfall on the site's disturbed areas as discussed below.
- The methodology to determine the design water quality volume or rate for the LID approach is the same as that described for the Channel Protection Volume calculation described in Step 4, except that the rainfall depth for the Water Quality will be 1 inch instead of the 1-year, 24-hour rainfall depth used for calculating the Channel Protection Volume. A few considerations specific to Water Quality Volume/Rate calculations are as follows:
    - Time of Concentration in the case of LID design is the time it takes a drop of water to move from the furthest point in the disturbed area to its discharge from the disturbed area.
    - Computer Model: If using acceptable computer models, perform the same procedure as that performed for calculating CPv in Step 4, but for 1 inch of rainfall depth.
    - Manual Calculation: If calculating manually, use the following formula:
        - Runoff Volume (ft^3) for each cover type = Qv x 1/12 x A
          Where
          A = disturbed area of the particular cover type (ft^2)
          Qv = Runoff Depth (in) = $(P – 0.2S)^2/(P + 0.8S)$
          P = 1 inch
          S = (1000/CN) – 10
        - Peak Runoff Rate (ft^3/sec) = qu x A x Qv x1/43,560
          Where
          A = disturbed area of the particular cover type (ft^2)
          Qv = Runoff Depth (in) calculated in previous step
          q_u = Unit Peak Discharge (cfs/mi^2/in), determined from TR-55 Exhibit 4-II
        - Sum the individual volumes and peak runoff rates to obtain the total design post-development water quality runoff volume and rate.
    - Determine the total post-development water quality runoff volume and rate for the entire site's disturbed areas. These are the design post-development water quality runoff volume and rate needing to be treated.
- Select BMPs from the list provided in Table 702-1 that will meet the performance criteria noted in Section 702.01 of this Chapter. Often, multiple types of BMPs used in series will be required to provide adequate treatment. Design the BMPs in conjunction with any detention control that is needed for peak rate control of larger floods (100-year), if possible.

Step 8: <u>Complete the LID Approach Utilization Summary Form</u>

- As the final step of the LID Approach, a summary of non-structural and structural BMPs utilized, as part of the LID Approach, in the site design of a particular development site is provided in **Table 702-7** and submitted as part of the permit request package.
- The presence of Table 702-7 in the submittal package and the information contained in the form would alert the plan reviewer that the LID Approach is being used to meet the post-construction stormwater quality requirements of the site and that the overall site design as well as peak discharge and detention calculations should be reviewed with the impacts of LID Approach in mind.

Summary of Runoff Reduction Recognitions for Water Quality Volume, Channel Protection, and Peak Flow Control Detention Volume for LID approach

As discussed throughout this Section, to encourage LID approach for stormwater management, runoff reduction recognitions towards all three major stormwater management requirements, i.e., Water Quality, Channel Protection, and Peak Runoff Detention, are associated with various BMPS as noted through the above 8-step process. These runoff reduction recognitions are summarized in **Table 702-8**.

702.06
Special Provisions for "Hot Spot" Land Uses

For all those projects involving land uses considered to be high pollutant producers or "hot spots" (see **Table 702-9** e.g., vehicle service and maintenance facilities, vehicle salvage yards and recycling facilities, vehicle and equipment cleaning facilities, fleet storage areas for buses, trucks, etc., industrial/commercial or any hazardous waste storage areas or areas that generate such wastes, industrial sites, restaurants and convenience stores, any activity involving chemical mixing or loading/unloading, outdoor liquid container storage, public works storage areas, commercial container nurseries, and some high traffic retail uses characterized by frequent vehicle turnover), additional water quality requirements may be imposed by the County Surveyor of the County where the project is located in in addition to those included in water quality criteria in order to remove potential pollutant loadings from entering either groundwater or surface water systems. These pre-treatment requirements are included in Table 702-9 and **Table 702-10**.

702.07
Construction Sequencing Considerations

BMPs noted in this chapter refer to post-construction BMPs, which continue to treat stormwater after construction has been completed and the site has been stabilized. Installing certain BMPs, such as bioretention areas and sand filters, prior to stabilization can cause failure of the measure due to clogging from sediment. If such BMPs are installed prior to site stabilization, they should be protected by traditional erosion control measures.

In those instances, the construction sequence must require that the pond is cleaned out with pertinent elevations and storage and treatment capacities reestablished as noted in the accepted stormwater management plan.

702.08
Easement Requirements

All stormwater quality management systems, including detention or retention basins, filter strips, pocket wetlands, in-line filters, infiltration systems, conveyance systems, structures and appurtenances located outside of the right-of-way shall be designated as common areas and incorporated into permanent, exclusive easements. For the purposes of access, monitoring, inspection, and general maintenance activities, adequate easement width, as detailed in Table 701-1, beyond the actual footprint of the stormwater quality management facility as well as a 20-foot wide access easement from a public right-of-way to each BMP shall be provided. The easement requirements noted in Table 701-1 and this section may be changed by the County Surveyor of the County where the project is located in as deemed necessary for specific cases. In addition, protected/restored areas for which recognition is sought (Steps 1 and 2 of LID Approach) must be left undisturbed in perpetuity and covered by a conservation easement or a similar instrument to ensure non-disturbance in perpetuity.

702.09
Inspection, Maintenance, Record Keeping, and Reporting

After the approval of the stormwater management permit by the County Surveyor of the County where the project is located in and the commencement of construction activities, the County Surveyor of the County where the project is located in has the authority to conduct inspections of the work being done to ensure full compliance with the provisions of this chapter, this document, and the terms and conditions of the approved permit.

Stormwater quality facilities shall be maintained in good condition, in accordance with the Operation and Maintenance procedures and schedules listed in this document, and/or the terms and conditions of the approved stormwater permit, and shall not be subsequently altered, revised, or replaced except in accordance with the approved stormwater permit, or in accordance with approved amendments or revisions in the permit.

Subsequent to successful installation of Post-construction BMPs, they need to be inspected and maintained regularly in accordance with the Operation and Maintenance Manual required to be prepared for each BMP. An operations and maintenance (O&M) manual for all private infrastructure, including but not limited to pipes, ponds, ditches, and BMPs (when required), shall be submitted for the final plan approval and permit process. The manual will become a maintenance guide for the drainage infrastructure once development is complete. The final O&M manual will be provided to the County in both hard copy and digital formats. The O&M manual maintenance agreement along with a site map showing the BMP locations shall be recorded with the final plat. The O&M manual will include the following:

1. Owner name, address, business phone number, home phone number, email address, cellular phone number, pager number;
2. Site drawings (8½" by 11" or 11" by 17"), showing both plan and cross-section views, showing the infrastructure and applicable features, including dimensions, easements, outlet works, forebays, signage, etc., as well as an overall site map of the development showing all structures;
3. Guidance on owner-required periodic inspections;
4. Requirement of owner to perform maintenance specified by County inspection, if any;
5. Guidance on routine maintenance, including mowing, litter removal, woody growth removal, signage, etc.;
6. Guidance on remedial maintenance; such as inlet replacement, outlet works maintenance, etc.;
7. Guidance on sediment and trash removal, both narrative and graphical, describing when sediment removal should occur in order to insure that BMPs and other infrastructure remain effective as water quality and/or quantity control devices;
8. A statement that the County's representatives have the right to enter the property to inspect the infrastructure;
9. A tabular schedule showing inspection and maintenance requirements; and
10. Identification of the property owner as the party responsible for all maintenance, including cost.

Checklists provided in **Appendix 702-5** or equivalent forms must be completed and maintained by the owner. In addition, a maintenance agreement in the format provided in **Appendix 702-6** shall be executed for all proposed stormwater management BMPs and submitted as part of the project permit package.

The County Surveyor of the County where the project is located in also has the authority to perform long-term, post-construction inspection of all public or privately owned stormwater quality facilities. The inspections will follow the operation and maintenance procedures included in this document and/or permit application for each specific BMP. The inspection will cover physical conditions, available water quality storage capacity and the operational condition of key facility elements. Noted deficiencies and recommended corrective action will be included in an inspection report.

BMP[A]	Typical % Removal Efficiency[B]	Maintenance Easement Requirements
	TSS	
Bioretention	90[C]	25 feet wide along the perimeter
Constructed Wetland	67[C]	25 feet wide along the outer perimeter of forebay & 30 feet wide along centerline of outlet
Underground Detention	70	20 feet wide strip from access easement to tank's access shaft & 30 feet wide along centerline of inlet and outlet
Extended Detention/Dry Pond	72	25 feet wide along the outer perimeter of forebay & 30 feet wide along centerline of outlet
Infiltration Basin	87	25 feet wide along the perimeter
Infiltration Trench	90[C]	25 feet wide along the perimeter
Constructed (Sand) Filter	70[C]	25 feet wide along the perimeter
Water Quality Device	NA[D]	20 feet wide strip from access easement to chamber's access shaft
Vegetated Filter Strip	78[C]	25 feet wide along the length on the pavement side
Vegetated Swale	81[C]	25 feet wide along the top of bank on one side
Wet Ponds/Retention Basin	80	25 feet wide along the outer perimeter of forebay & 30 feet wide along centerline of outlet

Notes:

A. Detailed specifications for these BMPs are provided in the fact sheets contained in Appendix 702-1.
B. Removal rates shown are based on typical results. Unless otherwise shown, data extracted by CBBEL from various data sources. These rates are also dependent on proper installation and maintenance. The ultimate responsibility for determining whether additional measures must be taken to meet the Ordinance requirements for site-specific conditions rests with the applicant.
C. IDEM Stormwater Quality Manual, 2007.
D. The removal rate for this category varies widely between various models and manufacturers. Independent testing must be provided, rather than the manufacturer's testing data. In lieu of Independent testing data, the latest pre-approved proprietary BMPs list from the City of Indianapolis. These BMPs must be configured as offline units. The accepted design flow rate for a Water Quality Device shall be the flow value at which 80% TSS removal rate is equaled or exceeded based on the unit's efficiency curve (flow rate versus removal rate graph).

TABLE 702-1: Pre-approved Post-Construction BMPs for Conventional Approach

BMP[A]	Runoff Reduction Recognition[B]
Protect Sensitive Areas	Area (acres complying with the requirements of this BMP) can be subtracted from site development area for Channel Protection Volume and Water Quality Volume/Rate calculations.
Protect Riparian Buffers	Area (acres complying with the requirements of this BMP) can be subtracted from site development area for Channel Protection Volume and Water Quality Volume/Rate calculations.
Minimize Total Disturbed Area	Area (acres complying with the requirements of this BMP) can be subtracted from site development area for Channel Protection Volume and Water Quality Volume/Rate calculations.
Reduce Impervious Surfaces	Area (acres complying with the requirements of this BMP) can be subtracted from site development area for Channel Protection Volume and Water Quality Volume/Rate calculations.
Protect Natural Flow Pathways	Area (acres complying with the requirements of this BMP) can be subtracted from site development area for Channel Protection Volume and Water Quality Volume/Rate calculations.
Cluster-Type Development	Area (undisturbed acres complying with the requirements of this BMP) can be subtracted from site development area for Channel Protection Volume and Water Quality Volume/Rate calculations.

Notes:

A. In using and crediting these BMPs, applicants must meet the review criteria located within the discussion of each BMP provided in Appendix 702-1.

B. If the LID track is pursued, reduced CNs (associated with pre-developed underlying soil types instead of the normal requirement of assigning the post-development CN according to the next lower infiltration soil group) for areas protected by these BMPs may be used for determining the post-developed runoff rates and volumes for larger events (up to and including the 100-year event). See **Table 702-8**.

TABLE 702-2:Pre-approved BMPs with Treatment Area Reduction Recognition for LID Approach

BMP[A]	Runoff Reduction Recognition[B]
Minimize Soil Compaction	Area (acres complying with the requirements of this BMP) can be assigned a CN based on the Pre-developed soil group conditions instead of the normal requirement of assigning the post-development CN according to the next lower infiltration soil group.
Protection of Existing Trees within disturbed areas (part of Protect Sensitive Areas)	Trees protected under the requirements of this BMP can be assigned a CN based on the Pre-developed soil group conditions at a rate of 800 square feet per tree instead of the normal requirement of assigning Post-developed CN according to the next lower infiltration soil group for the acres covered by the tree area.
Soil Amendment and Restoration	Area (acres complying with the requirements of this BMP) can be assigned a CN based on the Pre-developed soil group conditions instead of the normal requirement of assigning the post-development CN according to the next lower infiltration soil group.
Native Revegetation	Proposed trees and shrubs to be planted under the requirements of this BMP can be assigned a CN based on the Pre-developed soil group conditions at a rate of 200 square feet per tree and 25 square feet per shrub instead of the normal requirement of assigning Post-developed CN according to the next lower infiltration soil group for the acres covered by the existing land use area.
Riparian Buffer Restoration	Proposed trees and shrubs to be planted under the requirements of this BMP can be assigned a CN based on the Pre-developed soil group conditions at a rate of 200 square feet per tree and 25 square feet per shrub instead of the normal requirement of assigning Post-developed CN according to the next lower infiltration soil group for the acres covered by the existing land use area.

Notes:

A. In using and crediting these BMPs, applicants must meet the review criteria located within the discussion of each BMP provided in Appendix 702-1.

B. If the LID track is pursued, reduced CNs (associated with pre-developed underlying soil types instead of the normal requirement of assigning the post-development CN according to the next lower infiltration soil group) for areas covered by these BMPs may be used for determining the post-developed runoff rates and volumes for larger events (up to and including the 100-year event). See **Table7028-8**.

Table 702-3: Pre-approved BMPs with CN Reduction Recognition for Restoring Disturbed Areas as Part of LID Approach

BMP[A]	Runoff Reduction Recognition[B]
Porous Pavement	Area covered by Porous Pavement with a minimum of 8 inch washed aggregate base may be assigned a weighted CN value of 87 (instead of CN of 98 normally used for impervious surfaces) for the purpose of Channel Protection Volume calculations. Use a weighted CN of 74 for the purpose of Water Quality Volume calculations, if needed. Note: If this BMP is specifically designed to provide permanent volume reduction through infiltration or through providing detention storage within the aggregate void, the volume reduction recognition discussed in Step 5 should be pursued instead of the CN reduction credit, assuming CN of 98.
Vegetated Roof	Vegetated roofs are designed to reduce runoff volumes. However, the volume reduction is highly dependent on the media and planting used, with the calculation methods very complex at times. In lieu of calculating the volume reduction benefits, the roof area with vegetated roof with a minimum media depth of 4 inches and a void ratio of 0.3 (as described in the fact sheet) may be assigned a weighted CN of 87 (instead of CN of 98 normally used for impervious surfaces) for the purpose of Channel Protection Volume calculations. Use a weighted CN of 74 for the purpose of Water Quality Volume calculations, if needed.

Notes :

A. In using and crediting these BMPs, applicants must meet the review criteria located within the discussion of each BMP provided in Appendix 702-1.

B. If the LID track is pursued, reduced CNs for areas covered by these BMPs may be used for determining the post-developed runoff rates and volumes for larger events (up to and including the 100-year event). See **Table 702-8** for weighted CN values used for such larger events.

Table 702-4: Pre-approved BMPs with CN Reduction Recognition for Reducing Imperviousness as Part of LID Approach

BMP[A]	Channel Protection Volume Reduction Recognition[B]
Infiltration Practices (Infiltration Basin, Subsurface Infiltration Bed, Infiltration Trench, and Dry Well)	Volume reduction is achieved by surface storage volume (if included in the design), subsurface volume (if included in the design), and infiltration volume as described in the fact sheet. If an underdrain has to be used due to soil conditions, no credit is granted for the "infiltration volume" portion.
Bioretention	Volume reduction is achieved by surface storage volume, soil storage volume, and infiltration bed volume as described in the fact sheet.
Vegetated Swale	Volume reduction is achieved by surface storage volume (if included in the design through inclusion of check dams) and active infiltration volume during the storm (when infiltration is expressly designed for as a purpose) as described in the fact sheet.

Notes:

A. In using and crediting these BMPs, applicants must meet the review criteria located within the discussion of each BMP provided in Appendix 702-1.

B. If the LID track is pursued, the volume reduction provided by these BMPs may be recognized/credited towards determining the post-developed runoff rates and volumes for larger events (up to and including the 100-year event). See **Table 702-8** for extent of runoff reduction recognition allowed for such larger events.

Table 702-5: Pre-approved Structural BMPs with Permanent Volume Reduction Recognition for Channel Protection as Part of LID Approach

BMP[A]	Runoff Reduction Recognition[B]
Constructed Wetland	The volume of the supplementary extended detention, in lieu of permanent volume reduction, is credited towards meeting Channel Protection Volume requirements so long as only 10% of the maximum stored volume is left in the basin after 36 hours from maximum storage time and no more than 40% from the maximum stored volume is released within the first 12 hours.
Extended Detention Wet/Dry Pond	The volume of the supplementary extended detention, in lieu of permanent volume reduction, is credited towards meeting Channel Protection Volume requirements so long as only 10% of the maximum stored volume is left in the basin after 36 hours from maximum storage time and no more than 40% of the maximum stored volume is released within the first 12 hours.

Notes:

A. In using and crediting these BMPs, applicants must meet the review criteria located within the discussion of each BMP provided in Appendix 702-1.

B. If the LID track is pursued, the volume reduction provided by these BMPs may be recognized/credited towards determining the post-developed runoff rates and volumes for larger events (up to and including the 100-year event). See **Table 702-8** for extent of runoff reduction recognition allowed for such larger events.

Table 702-6:Pre-approved BMPs with Additional, As-needed Extended Detention Runoff Reduction Recognitions for Channel Protection as Part of LID Approach

This checklist is a tool to allow both the regulatory agency and the Developer to reference various LID measures implemented within the development in order to meet the development's Post Construction Stormwater Management requirements.

Project Name: **Engineer:** **Developer:**

Total Site Area: _____sf
Proposed Earth Disturbance Area: _____sf
Existing Impervious Area: _____sf

LID Approach Step	Potential BMPs	√	Total Surface Area (sf) of LID Measure/BMP	Plan Pg # of LID Measure	Pg # of Calculations for LID Measure
1. Minimize Disturbed Areas	Protect Sensitive Areas				
	Protect Riparian Buffers				
	Protect Natural Flow Pathways				
	Minimize Total Disturbed Area				
	Reduce Impervious Surfaces				
	Cluster-Type Development				
2. Restore Disturbed Areas	Minimize Soil Compaction				
	Protect Trees in Disturbed Areas				
	Soil Amendment and/or Restoration				
	Native Revegetation				
	Riparian Buffer Restoration				
3. Minimize Imperviousness	Porous Pavement				
	Vegetated Roof				
4. Determine Volume Control Needed for Channel Protection	N/A (calculation step only)		**N/A**		
5. Provide Distributed Retention/Infiltration Practices	Infiltration Practices*				
	Bio-retention				
	Vegetated Swale				
6. Additional (as-needed) Extended Detention Practices	Constructed Wetland		**N/A**		
	Extended Detention Wet/Dry Pond		**N/A**		
7. Additional (as-needed) Water Quality BMPs	Pre-approved BMPs noted in Table 8-1 for conventional method		**N/A**		
Additional Flood Peak Control (2yr-100yr)	Detention Pond (wet/dry/underground)		**N/A**		

Total Surface Area of LID Measures _____ sf

Proposed Final Impervious Surface Area _____ sf

Percent of Total Site Area Covered by LID _____%

Note: Not all LID measures are necessary or appropriate for every site. It is imperative that proper site assessments and due diligence is completed by the Developer and/or Engineer prior to design.

*: Infiltration Practices include: Infiltration Basins, Subsurface Infiltration Beds or Trenches, and Dry Wells

Table 702-7: LID Approach Summary Checklist

LID BMP GROUP	DESCRIPTION	POTENTIAL BMPS	RUNOFF REDUCTION RECOGNITION FOR POST-CONSTRUCTION WATER QUALITY CALCULATIONS		RUNOFF REDUCTION RECOGNITION FOR WATER QUANTITY (DETENTION AND STORM DRAIN) CALCULATIONS
			WATER QUALITY VOLUME	CHANNEL PROTECTION VOLUME	
1	Minimize Disturbed Areas	• Protect Sensitive Areas • Protect Riparian Buffers • Minimize Total Disturbed Area • Protect Natural Flow Pathways • Reduce Impervious Surfaces • Cluster-Type Development	Full recognition through allowing to use "disturbed surface area" only for all calculations	Full recognition through allowing to use "disturbed surface area" only for all calculations	Full recognition through allowing CN for the undisturbed, protected area to be calculated based on pre-developed underlying soil types
2	Restore Disturbed Areas	• Minimize Soil Compaction • Protection of Existing Trees within disturbed areas (part of Minimize Total Disturbed Area) • Soil Amendment and Restoration • Native Revegetation • Riparian Buffer Restoration	Full recognition through allowing CN for the restored/protected area to be calculated based on pre-developed underlying soil types	Full recognition through allowing CN for the restored/protected area to be calculated based on pre-developed underlying soil types	Full recognition through allowing CN for the restored/protected area to be calculated based on pre-developed underlying soil types
3	Minimize Imperviousness	• Porous Pavement	Full recognition of perviousness through allowing CN for the application area to be calculated based on a pre-set value (74 instead of 98) AND full recognition of the stored volume (if provided for in the design) and WQ treatment, if designed as a true infiltration practice (no underdrain/ or extended 24-48 hrs release)	Partial (weighted) recognition of perviousness through allowing CN for the application area to be calculated based on a pre-set value (87 instead of 98) AND full recognition of the stored volume (if provided for in the design), if designed as a true infiltration practice (no underdrain/ or extended 24-48 hrs release)	Partial (weighted) recognition of perviousness through allowing CN for the application area to be calculated based on pre-set values (89 for 10-year and 90 for 100-year calculations instead of using 98).
		• Vegetated Roof	Full recognition of perviousness through allowing CN for the application area to be calculated based on a pre-set value (74 instead of 98) AND full recognition of the stored volume (if provided for in the design) and/or WQ treatment if designed for	Partial (weighted) recognition of perviousness through allowing CN for the application area to be calculated based on a pre-set value (87 instead of 98)	Partial (weighted) recognition of perviousness through allowing CN for the application area to be calculated based on a pre-set value 89 for 10-year and 90 for 100-year calculations instead of using 98)
4	Provide Distributed Infiltration Practices (or Filtration Practices, if underdrains have to be provided) in Common Areas	• Infiltration Practices (Infiltration Basin, Subsurface Infiltration Bed, Infiltration Trench, and Dry Well) • Bioretention • Vegetated Swale	Full recognition of perviousness through allowing CN for the application area to be calculated based on cover type and underlying soil AND full recognition of the retained volume (if provided for in the design) and/or WQ treatment if designed for	Full recognition of retained volume if designed as true infiltration practice (on appropriate soil and no underdrain/ or extended 24-48 hrs release)	Limited recognition of retained volume (up to the Channel Protection Volume) if designed as true infiltration practice (on appropriate soil and no underdrain/ or extended 24-48 hrs release)
5	Provide, as-needed, Extended Detention Practices in Common Areas	• Constructed Wetland • Extended Detention Wet/Dry Pond	full recognition of the stored volume (with extended 24-48 hrs release) and/or WQ treatment if designed for	Full Recognition of stored volume (with extended 24-48 hrs release)	Full Recognition of stored volume (with extended 24-48 hrs release)
6	Provide, As needed, Additional Water Quality BMPs	• Pre-approved BMPs noted in Table 702-1 for conventional method	Full recognition of WQ treatment	N/A	N/A

Table 702-8: Summary of Runoff Reduction Recognitions for Pre-Approved BMPS Used in the LID Approach

Stormwater Hot Spots	Minimum Pre-Treatment Options
Vehicle Maintenance and Repair Facilities	A, E, F, G
Vehicle Fueling Stations	A, D, G
Drive-through Restaurants, Pharmacies, Convenience Stores	B, C, D, I, K
Outdoor Chemical Mixing or Handling	G, H
Outdoor Storage of Liquids	G
Commercial Nursery Operations	I, J, L
Other Uses or Activities Designated by Appropriate Authority	As Required

Table 702-9: Pre-Treatment options for Stormwater Hot Spots

Minimum Pre-Treatment Options	
A	Oil/Water Separators / Hydrodynamic Separators
B	Sediment Traps/Catch Basin Sumps
C	Trash/Debris Collectors in Catch Basins
D	Water Quality Inserts for Inlets
E	Use of Drip Pans and/or Dry Sweep Material under Vehicles/Equipment
F	Use of Absorbent Devices to Reduce Liquid Releases
G	Spill Prevention and Response Program
H	Diversion of Stormwater away from Potential Contamination Areas
I	Vegetated Swales/Filter Strips
J	Constructed Wetlands
K	Stormwater Filters (Sand, Peat, Compost, etc.)
L	Stormwater Collection and Reuse (especially for irrigation)
M	BMPs that are a part of a Stormwater Pollution Prevention Plan (SWPPP) under a NPDES Permit

Table 702-10: Minimum Pre-Treatment Options

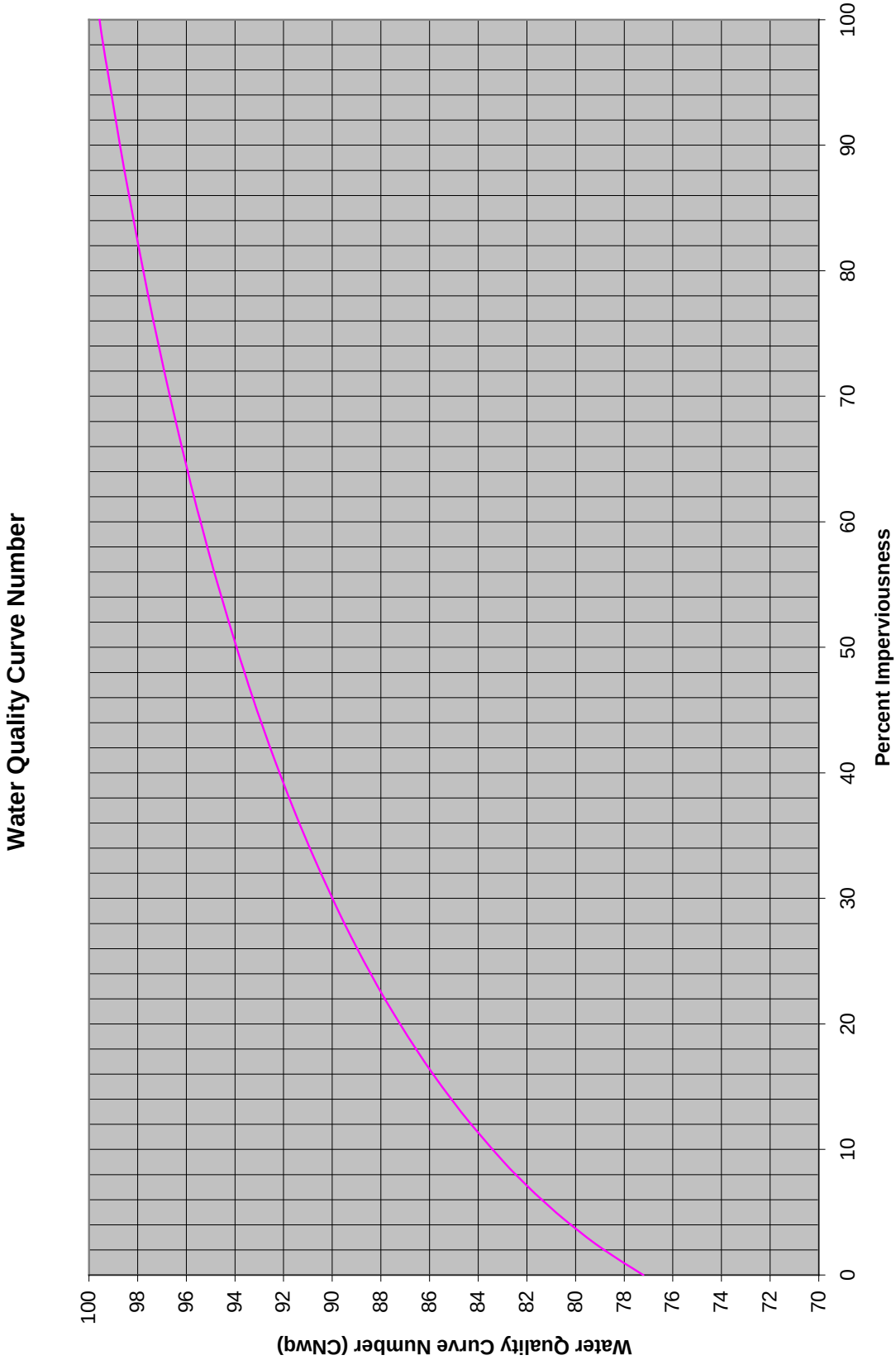

Exhibit 702-1: Curve Number Calculation for Water Quality Storm Event